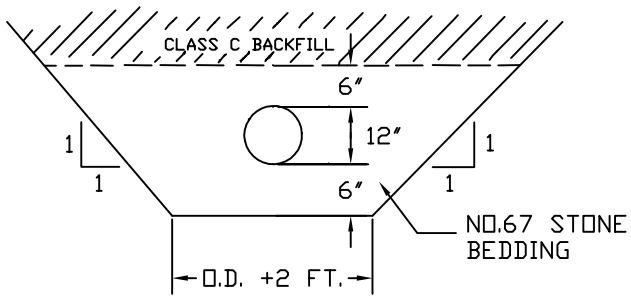

SECTION A - A

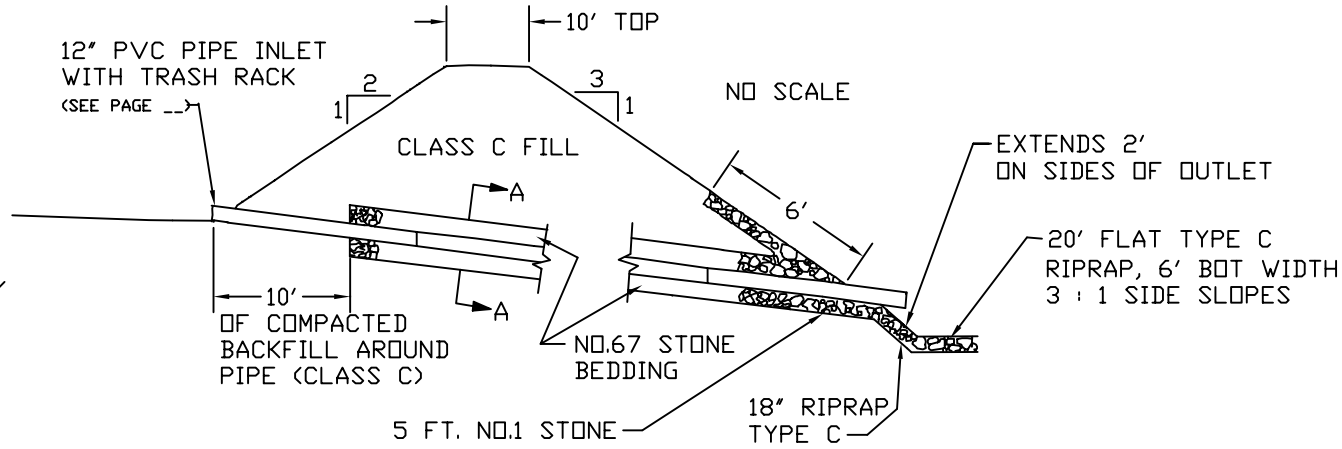

PIPE STRUCTURE BACKFILL DETAIL

NOTE: NATURAL EMERGENCY SPILLWAY
TO BE USED AT STA. 12+00, B/L "A"

Description: PIPE STRUCTURE BACKFILL

Filename: OH200293.DWG