ROCK PROTECTION AT CULVERTS

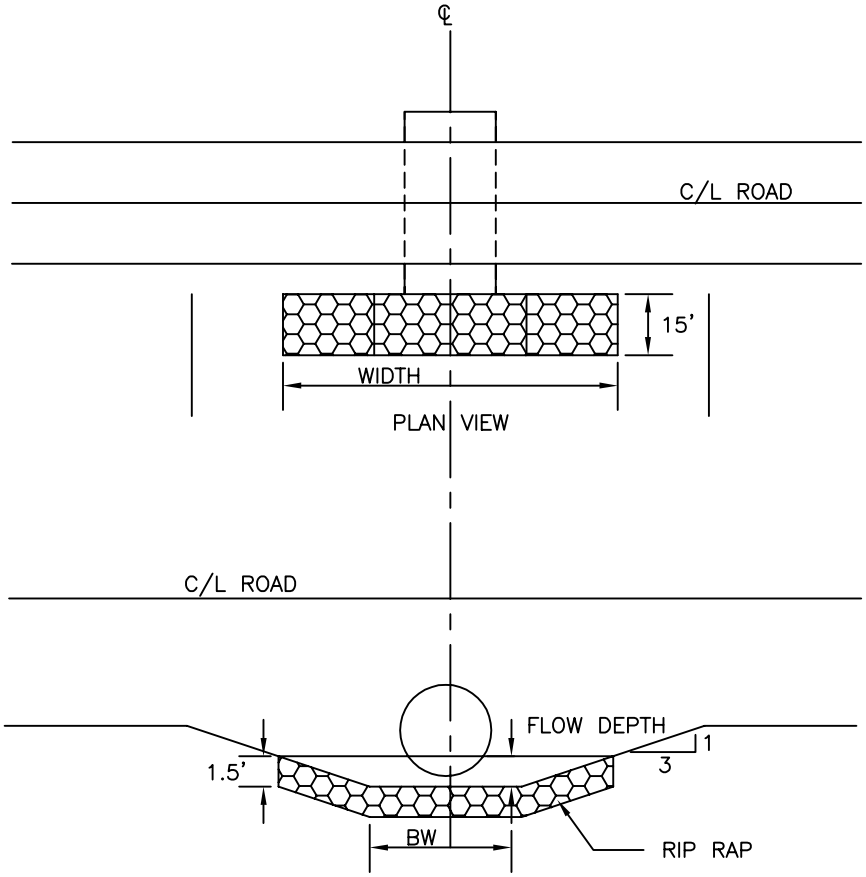

CROSS SECTION

WIDTH = BW + 2(FLOW DEPTH X SIDE SLOPE).

Description: *ROCK PROTECTION AT CULVERTS*

Filename: *OH600893.DWG*