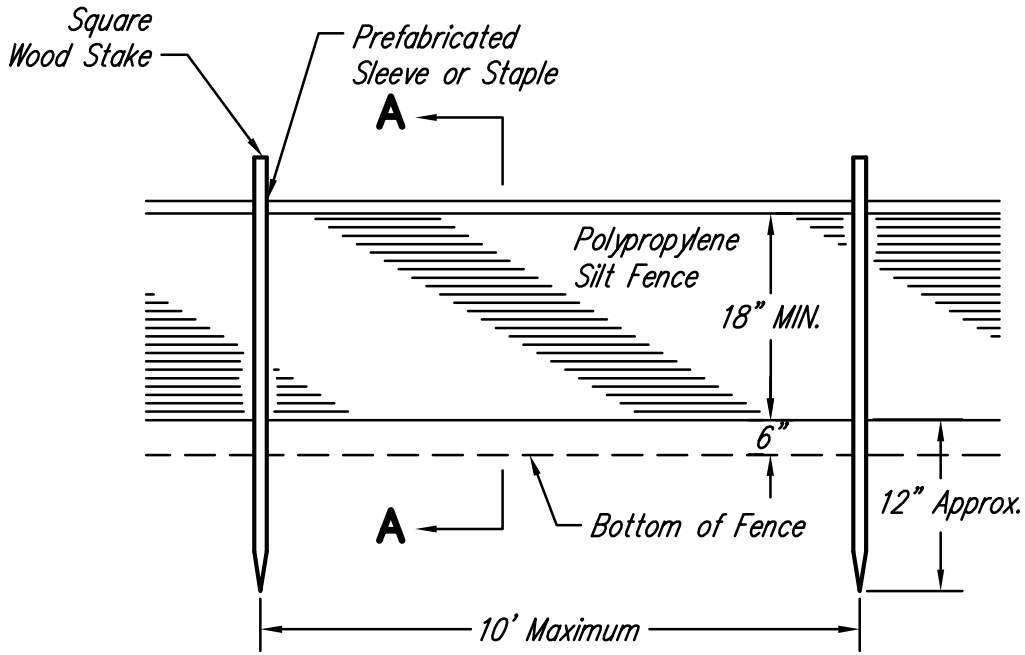

SILT FENCE

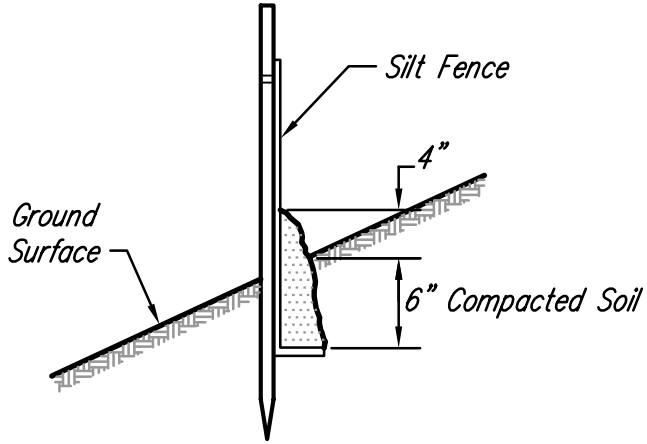

SECTION A–A