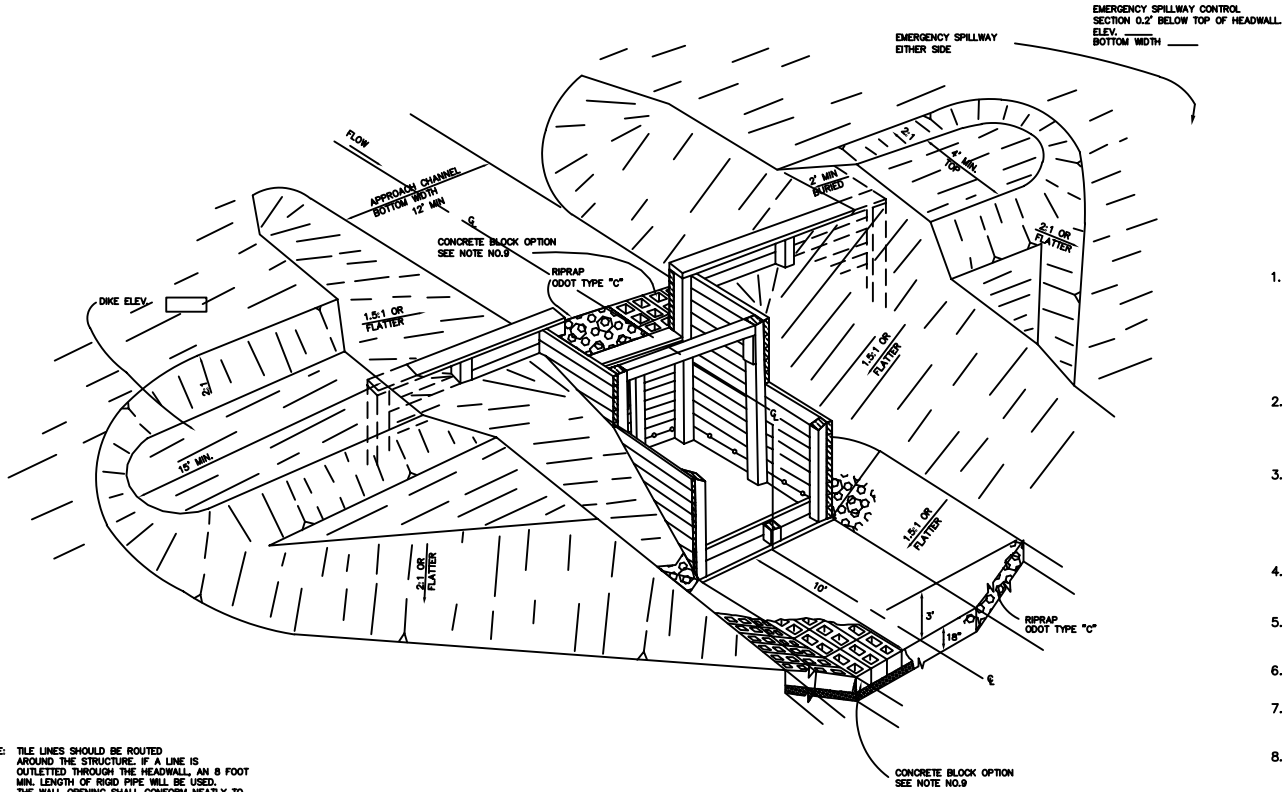

NOTE: TILE LINES SHOULD BE ROUTED AROUND THE STRUCTURE. IF A LINE IS OUTLETTED THROUGH THE HEADWALL, AN 8 FOOT MIN. LENGTH OF RIGID PIPE WILL BE USED. THE WALL OPENING SHALL CONFORM NEATLY TO THE PIPE AND ADDITIONAL VERTICAL 2"X8" SUPPORTS NAILED TO THE WALL ON BOTH SIDES OF THE PIPE. SUPPORTS SHALL EXTEND 12 INCHES ABOVE AND BELOW THE PIPE.

PICTORIAL VIEW

NOT TO SCALE

NOTES

1. WOOD BOARDS SHALL BE NOMINAL 2"X6" AND 2"X8" SIZE AND WOOD POSTS SHALL BE NOMINAL 6"X6" SIZE. ALL WOOD MEMBERS SHALL BE NO.2 YELLOW PINE AND TREATED IN ACCORDANCE WITH FEDERAL SPECIFICATION TT-W-571 FOR WOOD PRESERVATION, RETAINING 0.4 POUNDS PER CUBIC FOOT OF CHROMATED COPPER ARSENATE (CCA).
2. TONGUE AND GROOVE BOARDS IN 16' LENGTHS SHALL BE USED. BOARDS SHALL BE CENTERED ON THE STRUCTURE TO AVOID JOINTS IN THE HEADWALL SECTION.
3. A MINIMUM OF 2 NAILS SHALL BE USED TO FASTEN EACH BOARD TO EACH POST. NAILS SHALL BE COATED RING OR BARBED SHANK, 6" LONG.
4. CONCRETE SHALL HAVE A MINIMUM COMPRESSIVE STRENGTH AT 28 DAYS EQUAL TO 3000 PSI (6 BAG MIX).
5. PLASTIC SHEETING SHALL BE POLYETHELENE AND HAVE A MINIMUM THICKNESS OF 6 MILS.
6. RIPRAP SHALL MEET THE ODOT GRADATION REQUIREMENTS FOR DUMPED ROCK.
7. DRAIN FILL SHALL MEET AASHTO GRADATION REQUIREMENTS FOR NO. 57 AGGREGATE.
8. CONCRETE BLOCKS SHALL BE 8"X8"X16" LONG, IN GOOD CONDITION AND FREE OF EXCESS MORTAR.
9. CONCRETE BLOCKS ON 4" OF NO. 57 GRAVEL MAY BE SUBSTITUTED FOR THE TYPE "C" RIPRAP. FILL CORES OF BLOCKS WITH NO. 57 GRAVEL.

TIMBER STRAIGHT DROP SPILLWAY

U.S. DEPARTMENT OF AGRICULTURE
SOIL CONSERVATION SERVICE

STANDARD DRAWING NO.: OH-N-309-CAD
APPROVAL DATE: 02/13/89

REVISIONS:

		Date		
Designed	HIRE & BRATE	1988	Approved by	
Drawn	B.A. PRATT	7-88	Title	
Traced			Title	
Checked			Sheet No of	Drawing No.

Description: TIMBER STRUCTURE, STRAIGHT DROP; SHEET 1 of 2

Filename: OH030989.DWG

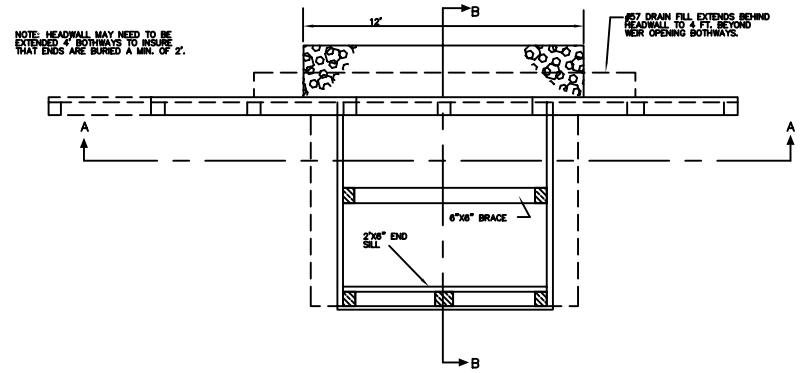

PLAN VIEW

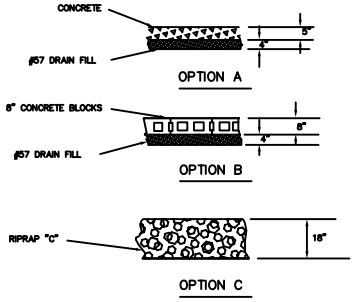

OPTIONAL FLOOR DETAILS

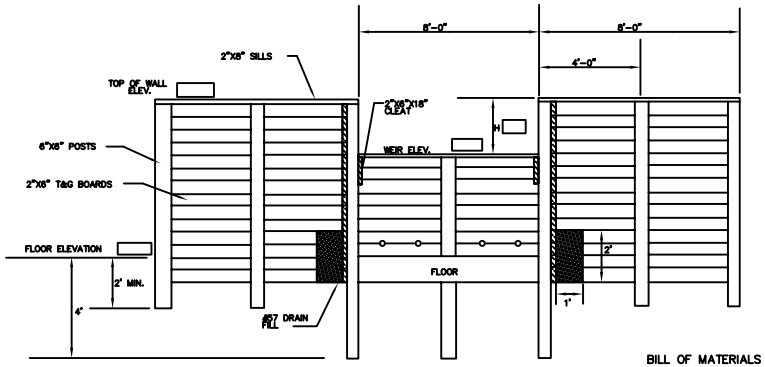

SECTION A–A

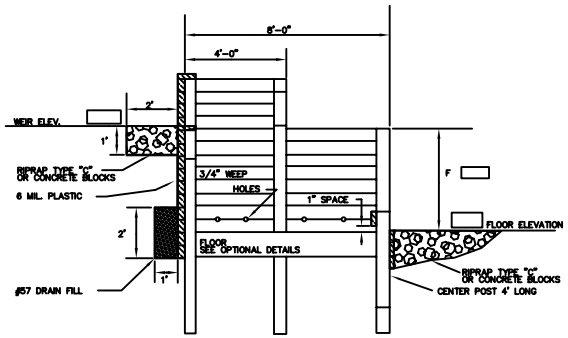

SECTION B–B

BILL OF MATERIALS

WOOD POSTS, 6"X6"X4'	1	EACH
WOOD POSTS, 6"X6"X ___	___	EACH
WOOD POSTS, 6"X6"X ___	___	EACH
WOOD BOARDS, 2"X6" TONGUE & GROOVE	___	LIN.FT.
WOOD BOARDS, 2"X8"X8'	3	EACH
CONCRETE, 6 BAG MIX	___	CU. YDS.
CONCRETE BLOCKS, 8"	___	EACH
RIPRAP, TYPE "C"	___	CU. YDS.
DRAIN FILL, ODOT NO. 57	___	CU. YDS.
NAILS, 8" RING, COATED	25	LBS.
PLASTIC SHEETING, 6 MIL.	60	SQ. FT.

TIMBER STRAIGHT DROP SPILLWAY

U.S. DEPARTMENT OF AGRICULTURE
SOIL CONSERVATION SERVICE

STANDARD DRAWING NO.: OH-N-309-CAD
APPROVAL DATE: 02/13/89

REVISIONS:

		Date
Designed	HIRE & BRATE	1988
Drawn	B.A. PRATT	7/88
Traced		
Checked		

Approved by ____
Title ____
Title ____
Sheet No. ____ of ____
Drawing No.

Description: TIMBER STRUCTURE, STRAIGHT DROP, SHEET 2 of 2

Filename: OHO30989.DWG