REPRODUCED WITH PERMISSION FROM:
Concrete Manure Storages Handbook,
MWPS-36
1st EDITION, 1994
© MIDWEST PLAN SERVICE
AMES, IA 50011-3080

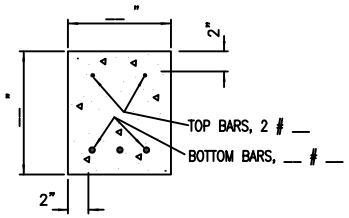


NO SHEAR REINFORCEMENT REQUIRED

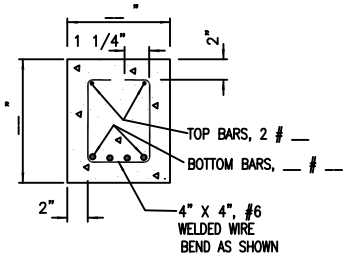


SHEAR REINFORCEMENT REQUIRED

## REINFORCING FOR BEAMS

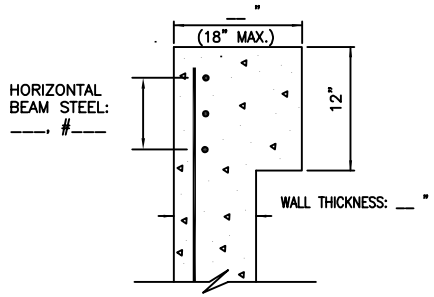


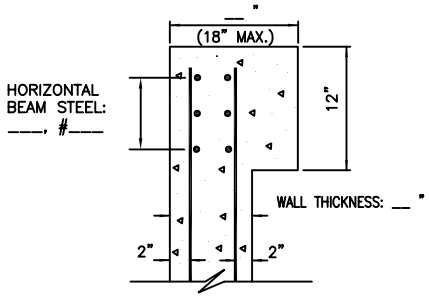


## ENDWALL AND SIDEWALL BEAMS

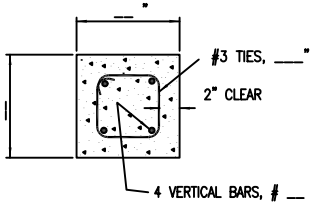


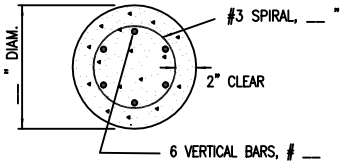


## BAR PLACEMENT FOR COLUMNS

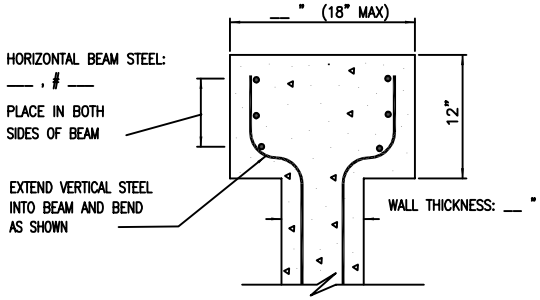


OPTION #1

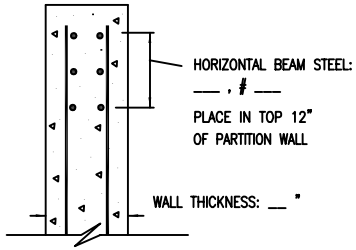


OPTION #2

## PARTITION BEAMS

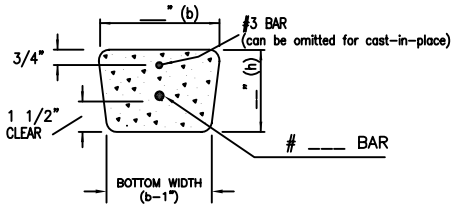


## SLAT DIMENSIONS

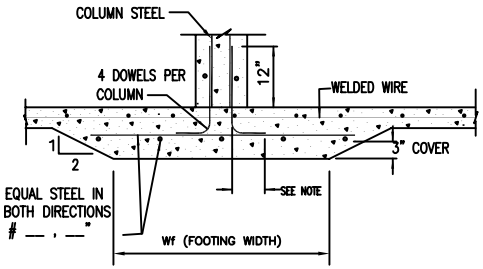


NOTE:
EXTEND 12" OF BAR VERTICALLY, MAXIMUM ALLOWABLE DISTANCE, THEN BEND 90°.

## BAR PLACEMENT FOR COLUMN FOOTING

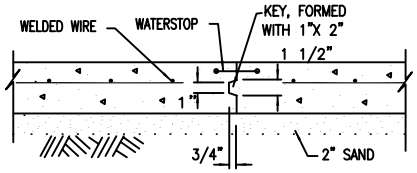


## FLOOR CONSTRUCTION JOINT

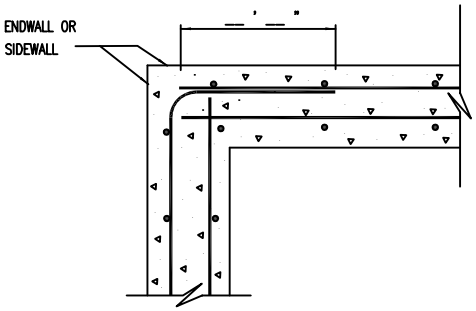


## CORNER DETAIL

NOT TO SCALE

STANDARD DRAWING NO.: OH-N-522-CAD
APPROVAL DATE: 7/25/00
REVISIONS:

Date
Designed
Drawn
Checked
Approved

RECTANGULAR TANK - MISCELLANEOUS DETAILS

USDA NRCS Natural Resources Conservation Service

File No. oh052200.dwg
Drawing No.
Sheet of

Description: RECTANGULAR TANK- MISCELLANEOUS DETAILS

OHIO NRCS TRI-STATE DESIGN TEAM

Filename: OH052200.DWG