OHIO 24-HOUR RAINFALL (INCHES)

COUNTY	2-yr	5-yr	10-yr	25-yr	50-yr	100-yr
ADAMS	2.9	3.5	4.0	4.8	5.4	6.1
ALLEN	2.5	3.1	3.6	4.3	4.8	5.4
ASHLAND	2.5	3.2	3.7	4.5	5.2	6.0
ASHTABULA	2.5	3.1	3.6	4.3	4.8	5.4
ATHENS	2.6	3.2	3.7	4.3	4.9	5.5
AUGLAIZE	2.5	3.1	3.6	4.3	4.8	5.4
BELMONT	2.5	3.0	3.5	4.1	4.7	5.2
BROWN	2.9	3.6	4.2	5.0	5.7	6.4
BUTLER	2.8	3.5	3.9	4.6	5.1	5.6
CARROLL	2.4	3.0	3.5	4.2	4.8	5.4
CHAMPAIGN	2.6	3.2	3.7	4.4	5.0	5.5
CLARK	2.7	3.3	3.8	4.4	4.9	5.4
CLERMONT	2.9	3.6	4.1	4.8	5.5	6.1
CLINTON	2.8	3.4	3.9	4.6	5.2	5.8
COLUMBIANA	2.4	2.9	3.4	4.0	4.5	5.0
COSHOCTON	2.5	3.1	3.7	4.5	5.2	6.0
CRAWFORD	2.5	3.2	3.7	4.5	5.1	5.8
CUYAHOGA	2.4	3.0	3.5	4.2	4.8	5.4
DARKE	2.7	3.3	3.8	4.4	5.0	5.6
DEFIANCE	2.5	3.1	3.6	4.3	4.9	5.5
DELAWARE	2.6	3.2	3.7	4.4	4.9	5.5
ERIE	2.4	3.1	3.6	4.4	5.0	5.7
FAIRFIELD	2.6	3.2	3.7	4.4	5.0	5.6
FAYETTE	2.7	3.3	3.8	4.6	5.2	5.8
FRANKLIN	2.6	3.2	3.7	4.4	5.0	5.6
FULTON	2.4	3.1	3.5	4.2	4.8	5.4
GALLIA	2.7	3.2	3.7	4.3	4.9	5.4
GEAUGA	2.5	3.1	3.6	4.3	4.9	5.5
GREENE	2.7	3.3	3.8	4.5	5.0	5.5
GUERNSEY	2.5	3.1	3.6	4.3	4.9	5.6
HAMILTON	2.9	3.5	4.0	4.7	5.2	5.8
HANCOCK	2.4	3.0	3.5	4.2	4.7	5.3
HARDIN	2.5	3.0	3.5	4.2	4.7	5.3
HARRISON	2.5	3.0	3.5	4.2	4.8	5.3
HENRY	2.5	3.0	3.5	4.2	4.8	5.3
HIGHLAND	2.8	3.5	4.0	4.8	5.5	6.2
HOCKING	2.6	3.2	3.7	4.4	5.0	5.5

OHIO 24-HOUR RAINFALL (INCHES)

COUNTY	2-yr	5-yr	10-yr	25-yr	50-yr	100-yr
HOLMES	2.5	3.1	3.6	4.5	5.2	5.9
HURON	2.5	3.1	3.6	4.5	5.2	5.9
JACKSON	2.7	3.3	3.8	4.4	4.9	5.5
JEFFERSON	2.4	3.0	3.4	4.0	4.5	5.1
KNOX	2.6	3.2	3.7	4.5	5.1	5.8
LAKE	2.4	3.0	3.5	4.2	4.8	5.4
LAWRENCE	2.7	3.3	3.7	4.4	4.9	5.4
LICKING	2.6	3.2	3.8	4.6	5.2	6.0
LOGAN	2.5	3.1	3.6	4.3	4.8	5.4
LORAIN	2.4	3.0	3.5	4.2	4.8	5.4
LUCAS	2.4	3.0	3.5	4.1	4.7	5.3
MADISON	2.6	3.2	3.7	4.4	4.9	5.5
MAHONING	2.4	2.9	3.4	4.0	4.5	5.0
MARION	2.5	3.1	3.6	4.3	4.8	5.4
MEDINA	2.5	3.1	3.6	4.3	4.8	5.5
MEIGS	2.6	3.2	3.6	4.3	4.8	5.3
MERCER	2.6	3.2	3.7	4.3	4.9	5.5
MIAMI	2.7	3.3	3.8	4.5	5.1	5.7
MONROE	2.5	3.1	3.5	4.2	4.7	5.2
MONTGOMERY	2.7	3.4	3.8	4.5	5.0	5.5
MORGAN	2.6	3.2	3.7	4.5	5.1	5.8
MORROW	2.6	3.2	3.7	4.4	4.9	5.5
MUSKINGUM	2.5	3.1	3.7	4.5	5.2	5.9
NOBLE	2.5	3.1	3.5	4.2	4.7	5.3
OTTAWA	2.3	2.9	3.4	4.2	4.8	5.5
PAULDING	2.5	3.1	3.6	4.3	4.8	5.4
PERRY	2.6	3.2	3.7	4.5	5.2	5.9
PICKAWAY	2.6	3.2	3.8	4.5	5.1	5.7
PIKE	2.7	3.3	3.8	4.5	5.1	5.7
PORTAGE	2.4	3.0	3.5	4.2	4.8	5.5
PREBLE	2.8	3.4	3.9	4.5	5.0	5.5
PUTNAM	2.5	3.1	3.5	4.2	4.8	5.3
RICHLAND	2.6	3.2	3.7	4.5	5.1	5.8
ROSS	2.7	3.3	3.8	4.5	5.1	5.7
SANDUSKY	2.4	3.0	3.6	4.3	5.0	5.8
SCIOTO	2.7	3.3	3.8	4.5	5.0	5.6
SENECA	2.4	3.1	3.6	4.4	5.1	5.8

OHIO 24-HOUR RAINFALL (INCHES)

COUNTY	2-yr	5-yr	10-yr	25-yr	50-yr	100-yr
SHELBY	2.6	3.2	3.7	4.4	5.0	5.6
STARK	2.4	3.0	3.5	4.3	4.9	5.6
SUMMIT	2.4	3.0	3.5	4.3	4.9	5.5
TRUMBULL	2.4	2.9	3.4	4.0	4.5	5.1
TUSCARAWAS	2.5	3.1	3.6	4.4	5.1	5.8
UNION	2.5	3.1	3.6	4.3	4.8	5.4
VAN WERT	2.5	3.1	3.6	4.3	4.9	5.5
VINTON	2.7	3.3	3.8	4.4	5.0	5.6
WARREN	2.8	3.4	3.9	4.6	5.2	5.7
WASHINGTON	2.5	3.1	3.6	4.2	4.7	5.2
WAYNE	2.5	3.1	3.6	4.4	5.1	5.8
WILLIAMS	2.5	3.1	3.6	4.3	4.9	5.5
WOOD	2.4	3.0	3.5	4.2	4.7	5.3
WYANDOT	2.5	3.1	3.5	4.2	4.8	5.4

Partial Duration 24-hour Rainfall Depths (inches), from NOAA Atlas 14, Volume 2[1]
(Replaces Weather Bureau TP-40, 1961).

[1] NOAA/NWS/Office of Hydrologic Development, Hydrometeorological Design Studies Center, http://www.nws.noaa.gov/ohd/hdsc/index.html. See this site for additional frequencies and durations.

Last updated 9/7/2004.

U.S. DEPARTMENT OF AGRICULTURE **OH-ENG-140**
NATURAL RESOURCES CONSERVATION SERVICE **11/89 (Revised)**

RUNOFF COMPUTATION SHEET

Owner _____ **Field No.** _____

Designer _____ **Date** _____

Checker _____ **Date** _____

Practice _____ **County** _____

WATERSHED CURVE NUMBER

Soil Name and Hydrologic Group (Table 2-1)	Cover Description (Cover type, treatment, and hydrologic condition) (Table 2-3)	CN	Area Acres or Percent	Product of CN x Area
		Totals =		

CN (weighted) = $\frac{\text{total product}}{\text{total area}}$ = _____ = _____ Use CN = [ ]

PEAK RATE OF DISCHARGE

Watershed Slope, Y = _____% Flow Length, ℓ = _____ ft.
Time of Concentration, T_c using ℓ, Y, CN…Figure 2-27, pg.2-41 = ___ hrs., or using equation 2-5, pg.2-5.

$$T_c = \frac{\ell^{0.8}\left(\frac{1000}{(CN)} - 9\right)^{0.7}}{1140\ Y^{0.5}} = \frac{(\ \ )^{0.8}\left(\frac{1000}{(\ \ )} - 9\right)^{0.7}}{1140(\ \ \ )^{0.5}} = _____\text{hrs.}$$

Estimating peak discharge

	Storm 1	Storm 2	Storm 3
1. Frequency……...yr.			
2. Rainfall, P(24-hour)……in.			
3. Initial abstraction, I_a(Use CN with table 2-4, pg.2-89)…….in.			
4. Compute I_a/P ratios…….			
5. Unit peak discharge, q_u……..cfs/ac/in. (Use t_c and I_a/P with exhibit 2-11, pg.2-13)			
6. Runoff, Q…….in. (Use P and CN with figure 2-26, pg. 2-40 or table 2-2, pg. 2-84)			
Peak discharge, q_p (where q_p=q_u AQ)……..…….cfs.			

OHIO COUNTIES
AVERAGE MONTHLY RAINFALLS (inches)

COUNTY	Jan	Feb	Mar	Apr	May	Jun	Jul	Aug	Sep	Oct	Nov	Dec	Total	Division
ADAMS	3.5	3.0	4.4	3.9	4.3	3.8	4.7	3.5	3.1	2.3	3.0	3.0	42.5	SC
ALLEN	2.3	2.1	2.8	3.5	3.9	3.9	3.6	2.8	2.7	2.5	2.6	2.3	35.0	NW
ASHLAND	2.6	2.0	3.2	3.5	4.0	4.0	4.1	2.9	2.7	2.1	2.6	2.3	36.0	CH
ASHTABULA	2.8	2.3	3.3	3.9	4.1	3.9	4.1	3.5	3.0	3.1	3.2	2.8	40.0	NE
ATHENS	3.0	2.6	3.9	3.8	4.1	4.1	4.6	3.2	2.8	2.3	2.8	2.8	40.0	SE
AUGLAIZE	2.3	2.0	2.9	3.5	3.8	3.8	3.5	2.9	2.8	2.6	2.7	2.3	35.0	WC
BELMONT	3.0	2.6	4.0	3.9	4.2	4.2	4.7	3.2	2.8	2.3	2.8	2.8	40.5	SE
BROWN	3.4	3.0	4.3	4.1	4.3	4.1	4.3	3.1	2.9	2.4	3.2	2.9	42.0	SW
BUTLER	3.1	2.8	4.1	3.9	4.1	3.9	4.1	2.9	2.7	2.2	3.0	2.7	39.5	SW
CARROLL	2.8	2.4	3.5	3.5	3.9	3.9	4.2	2.9	2.7	2.6	2.6	2.5	37.5	NH
CHAMPAIGN	2.4	2.1	3.1	3.8	4.1	4.1	3.8	3.1	3.0	2.7	2.9	2.4	37.5	WC
CLARK	2.5	2.1	3.1	3.8	4.2	4.2	3.8	3.1	3.0	2.8	2.9	2.5	38.0	WC
CLERMONT	3.3	2.9	4.2	4.0	4.2	4.0	4.2	3.1	2.8	2.3	3.2	2.8	41.0	SW
CLINTON	3.4	3.1	4.4	4.2	4.4	4.2	4.4	3.2	3.0	2.4	3.3	3.0	43.0	SW
COLUMBIANA	2.8	2.3	3.5	3.5	3.8	3.8	4.1	2.9	2.7	2.6	2.6	2.4	37.0	NH
COSHOCTON	2.9	2.2	3.4	3.7	4.3	4.3	4.4	3.2	3.0	2.3	2.8	2.5	39.0	CH
CRAWFORD	2.5	2.1	2.9	3.6	3.9	3.9	3.9	3.1	2.8	2.3	2.7	2.3	36.0	NC
CUYAHOGA	2.7	2.2	3.1	3.6	3.8	3.6	3.8	3.2	2.9	2.9	3.0	2.7	37.5	NE
DARKE	2.4	2.1	3.0	3.8	4.1	4.1	3.7	3.0	2.9	2.7	2.8	2.4	37.0	WC
DEFIANCE	2.3	2.0	2.7	3.4	3.8	3.8	3.5	2.7	2.6	2.5	2.5	2.2	34.0	NW
DELAWARE	2.8	2.2	3.6	3.8	4.0	3.9	4.0	3.0	2.7	2.0	2.6	2.4	37.0	C
ERIE	2.4	2.0	2.8	3.5	3.7	3.7	3.7	3.0	2.7	2.2	2.6	2.2	34.5	NC
FAIRFIELD	2.9	2.3	3.7	4.0	4.2	4.1	4.2	3.1	2.7	2.1	2.7	2.5	38.5	C
FAYETTE	2.9	2.4	3.8	4.0	4.2	4.1	4.2	3.1	2.8	2.1	2.8	2.6	39.0	C
FRANKLIN	2.8	2.2	3.6	3.8	4.1	4.0	4.1	3.0	2.7	2.0	2.7	2.5	37.5	C
FULTON	2.2	2.0	2.7	3.4	3.7	3.7	3.5	2.7	2.6	2.4	2.5	2.1	33.5	NW
GALLIA	3.4	3.0	4.3	3.8	4.2	3.7	4.6	3.4	3.0	2.3	2.9	2.9	41.5	SC
GEAUGA	3.0	2.4	3.5	4.0	4.3	4.0	4.3	3.6	3.2	3.3	3.4	3.0	42.0	NE
GREENE	3.1	2.8	4.0	3.8	4.0	3.8	4.0	2.9	2.7	2.2	3.0	2.7	39.0	SW
GUERNSEY	3.0	2.6	3.9	3.8	4.1	4.1	4.6	3.2	2.8	2.3	2.8	2.8	40.0	SE
HAMILTON	3.2	2.9	4.1	3.9	4.1	3.9	4.1	3.0	2.7	2.2	3.1	2.8	40.0	SW
HANCOCK	2.3	2.1	2.8	3.5	3.9	3.9	3.6	2.8	2.7	2.5	2.6	2.3	35.0	NW
HARDIN	2.3	2.0	2.9	3.5	3.8	3.8	3.5	2.8	2.8	2.6	2.7	2.3	35.0	WC

OHIO COUNTIES
AVERAGE MONTHLY RAINFALLS (inches)

COUNTY	Jan	Feb	Mar	Apr	May	Jun	Jul	Aug	Sep	Oct	Nov	Dec	Total	Division
HARRISON	2.9	2.4	3.7	3.7	4.1	4.1	4.4	3.0	2.8	2.7	2.7	2.5	39.0	NH
HENRY	2.3	2.0	2.7	3.4	3.8	3.8	3.5	2.7	2.6	2.5	2.5	2.2	34.0	NW
HIGHLAND	3.4	3.0	4.4	4.1	4.4	4.1	4.4	3.2	2.9	2.4	3.3	2.9	42.5	SW
HOCKING	3.0	2.6	3.9	3.8	4.1	4.1	4.6	3.2	2.8	2.3	2.8	2.8	40.0	SE
HOLMES	2.8	2.1	3.3	3.6	4.2	4.2	4.3	3.1	2.9	2.2	2.8	2.5	38.0	CH
HURON	2.5	2.1	2.9	3.6	3.9	3.9	3.9	3.1	2.8	2.3	2.7	2.3	36.0	NC
JACKSON	3.4	3.0	4.3	3.8	4.2	3.7	4.6	3.4	3.0	2.3	2.9	2.9	41.5	SC
JEFFERSON	2.9	2.4	3.6	3.6	4.0	4.0	4.3	3.0	2.8	2.7	2.7	2.5	38.5	NH
KNOX	2.9	2.2	3.4	3.7	4.3	4.3	4.4	3.2	3.0	2.3	2.8	2.5	39.0	CH
LAKE	2.7	2.2	3.1	3.6	3.8	3.6	3.8	3.2	2.9	2.9	3.0	2.7	37.5	NE
LAWRENCE	3.5	3.0	4.3	3.8	4.2	3.7	4.6	3.5	3.1	2.3	3.0	3.0	42.0	SC
LICKING	2.9	2.4	3.8	4.0	4.2	4.1	4.2	3.1	2.8	2.1	2.8	2.6	39.0	C
LOGAN	2.3	2.0	3.0	3.7	4.0	4.0	3.7	2.9	2.8	2.6	2.7	2.3	36.0	WC
LORAIN	2.4	2.0	2.8	3.5	3.7	3.7	3.7	3.0	2.7	2.2	2.6	2.2	34.5	NC
LUCAS	2.1	1.8	2.5	3.2	3.5	3.5	3.2	2.5	2.5	2.3	2.4	2.0	31.5	NW
MADISON	2.9	2.3	3.7	4.0	4.2	4.1	4.2	3.1	2.7	2.1	2.7	2.5	38.5	C
MAHONING	2.7	2.2	3.3	3.3	3.7	3.7	3.9	2.8	2.6	2.5	2.5	2.3	35.5	NH
MARION	2.6	2.1	3.5	3.7	3.9	3.8	3.9	2.8	2.5	1.9	2.5	2.3	35.5	C
MEDINA	2.6	2.1	3.0	3.5	3.7	3.5	3.7	3.1	2.8	2.9	3.0	2.6	36.5	NE
MEIGS	3.4	2.9	4.2	3.8	4.1	3.7	4.5	3.4	3.0	2.2	2.9	2.9	41.0	SC
MERCER	2.3	2.0	2.9	3.5	3.8	3.8	3.5	2.8	2.8	2.6	2.7	2.3	35.0	WC
MIAMI	2.3	2.0	3.0	3.7	4.0	4.0	3.7	2.9	2.8	2.6	2.7	2.3	36.0	WC
MONROE	3.1	2.6	4.0	3.9	4.2	4.2	4.7	3.3	2.9	2.3	2.9	2.9	41.0	SE
MONTGOMERY	3.1	2.8	3.9	3.7	3.9	3.7	3.9	2.9	2.7	2.2	3.0	2.7	38.5	SW
MORGAN	3.0	2.6	3.8	3.7	4.0	4.0	4.5	3.2	2.8	2.3	2.8	2.8	39.5	SE
MORROW	2.8	2.2	3.6	3.8	4.0	3.9	4.0	3.0	2.6	2.0	2.7	2.4	37.0	C
MUSKINGUM	2.9	2.6	3.8	3.7	4.0	4.0	4.5	3.1	2.7	2.3	2.7	2.7	39.0	SE
NOBLE	3.0	2.6	3.8	3.7	4.0	4.0	4.5	3.2	2.8	2.3	2.8	2.8	39.5	SE
OTTAWA	2.2	1.8	2.5	3.2	3.4	3.4	3.4	2.7	2.5	2.0	2.4	2.0	31.5	NC
PAULDING	2.3	2.0	2.8	3.5	3.8	3.8	3.5	2.8	2.7	2.5	2.6	2.2	34.5	NW
PERRY	3.0	2.6	3.9	3.8	4.1	4.1	4.6	3.2	2.8	2.3	2.8	2.8	40.0	SE
PICKAWAY	2.9	2.4	3.8	4.0	4.2	4.1	4.2	3.1	2.8	2.1	2.8	2.6	39.0	C
PIKE	3.3	2.9	4.2	3.7	4.1	3.6	4.5	3.3	2.9	2.2	2.9	2.9	40.5	SC
PORTAGE	2.7	2.2	3.1	3.6	3.8	3.6	3.8	3.2	2.9	2.9	3.0	2.7	37.5	NE

OHIO COUNTIES
AVERAGE MONTHLY RAINFALLS (inches)

COUNTY	Jan	Feb	Mar	Apr	May	Jun	Jul	Aug	Sep	Oct	Nov	Dec	Total	Division
PREBLE	3.1	2.8	3.9	3.7	3.9	3.7	3.9	2.9	2.7	2.2	3.0	2.7	38.5	SW
PUTNAM	2.3	2.0	2.8	3.5	3.8	3.8	3.5	2.8	2.7	2.5	2.6	2.2	34.5	NW
RICHLAND	2.7	2.0	3.2	3.5	4.0	4.0	4.1	3.0	2.8	2.1	2.7	2.4	36.5	CH
ROSS	3.2	2.8	4.0	3.6	3.9	3.5	4.3	3.2	2.8	2.1	2.8	2.8	39.0	SC
SANDUSKY	2.3	1.9	2.6	3.3	3.6	3.6	3.6	2.8	2.6	2.1	2.5	2.1	33.0	NC
SCIOTO	3.4	2.9	4.3	3.8	4.2	3.7	4.6	3.4	3.0	2.3	2.9	3.0	41.5	SC
SENECA	2.4	2.1	2.8	3.5	3.8	3.8	3.8	3.0	2.7	2.3	2.6	2.2	35.0	NC
SHELBY	2.3	2.0	3.0	3.7	4.0	4.0	3.7	2.9	2.8	2.6	2.7	2.3	36.0	WC
STARK	2.7	2.3	3.4	3.4	3.8	3.8	4.1	2.8	2.6	2.6	2.6	2.4	36.5	NH
SUMMIT	2.7	2.2	3.2	3.7	3.8	3.6	3.8	3.3	2.9	3.0	3.1	2.7	38.0	NE
TRUMBULL	2.7	2.2	3.1	3.6	3.8	3.6	3.8	3.2	2.9	2.9	3.0	2.7	37.5	NE
TUSCARAWAS	2.9	2.4	3.5	3.5	3.9	3.9	4.2	3.0	2.8	2.7	2.7	2.5	38.0	NH
UNION	2.7	2.2	3.5	3.7	4.0	3.9	4.0	2.9	2.6	2.0	2.6	2.4	36.5	C
VAN WERT	2.4	2.1	2.9	3.5	3.9	3.9	3.6	2.8	2.8	2.6	2.7	2.3	35.5	NW
VINTON	3.0	2.6	4.0	3.9	4.2	4.2	4.7	3.2	2.8	2.3	2.8	2.8	40.5	SE
WARREN	3.3	3.0	4.3	4.0	4.3	4.0	4.2	3.1	2.9	2.3	3.2	2.9	41.5	SW
WASHINGTON	3.0	2.6	3.8	3.7	4.0	4.0	4.5	3.2	2.8	2.3	2.8	2.8	39.5	SE
WAYNE	2.6	2.0	3.2	3.5	4.0	4.0	4.1	2.9	2.7	2.1	2.6	2.3	36.0	CH
WILLIAMS	2.3	2.0	2.7	3.4	3.8	3.8	3.5	2.7	2.6	2.5	2.5	2.2	34.0	NW
WOOD	2.2	1.9	2.6	3.3	3.6	3.6	3.3	2.6	2.5	2.4	2.4	2.1	32.5	NW
WYANDOT	2.5	2.1	2.9	3.5	3.8	3.8	3.8	3.0	2.8	2.3	2.7	2.3	35.5	NC

Source: The annual precipitation values, represent average amounts for each county. Data is from the Hydrologic Atlas for Ohio, Water Inventory Report No. 28, 1991, Division of Water, ODNR.

Monthly distribution of annual values was developed, using the average distribution for each of the ten hydrologic divisions as defined in NOAA Climatological Data, Ohio, 1999, Volume 104, No. 13. The ten hydrological divisions and associated abbreviations used in the charts are listed below.

Northwest - NW
West Central - WC
Southwest - SW
North Central - NC
Central - C
South Central - SC
Northeast - NE
Central Hills - CH
Northeast Hills - NH

ADJUSTING PEAK RATES OF DISCHARGE FROM SMALL WATERSHEDS IN FLAT AREAS WHERE PONDING OR SWAMPY AREAS OCCUR IN WATERSHED

Peak flows as determined by the use of ES-1027 in Chapter 2 of the Engineering Field Manual assume that the topography is such that you have approximately uniform surface flow into ditches, drains, and streams. The peak flows are approximately the same as those obtained by preparing flood hydrographs and valley flood routing to the point of design. The values obtained by this procedure provide reasonable peak discharges for small watersheds except on flat areas and where ponds or swampy areas do not occur in the watershed. Where these conditions occur, a considerable amount of the surface runoff may be retained in temporary storage and the peak rate of runoff should be reduced to reflect this condition. Preparing hydrographs and flood routing through these areas gives the proper reduction in peaks, but for all practical purposes, the use of the adjustment factors in Tables OH2-2, OH2-3, and OH2-4 provide satisfactory approximations to determine this reduction.

Table OH2-2 contains adjustment factors to be used when the ponding or swampy areas are located in the path of flow in the vicinity of the design point. Table OH2-3 contains adjustment factors to be used when a significant amount of the flow from the complete watershed passes through ponding or swampy areas and these areas are spread throughout the watershed. Table OH2-4 contains adjustment factors to be used when a significant amount of the flow from the complete watershed passes through ponding or swampy areas, which are located only in the upper reaches of the watershed.

This procedure for determining peak flows can only be used for the conditions itemized above. It should be emphasized that sound judgement must be exercised in applying this procedure. It cannot be used blindly for the purpose of obtaining smaller design peak discharge values.

The following guidelines and examples are provided for clarifying the use of this procedure.

1. Land on slopes of 0-2% should be considered as having the characteristics of being contoured and the appropriate runoff curve number for contoured land should be used.

2. On flat watersheds (those with an average slope of less than 0.5%) assume that ponding characteristics will occur over the majority of the watershed unless the watershed has an improved drainage system installed and the fields draining to these drainage channels have been smoothed to provide positive drainage toward the channels. Ratios of D.A./Ponding and Swampy Area to be used in Table OH2-3 for these cases are: Two (2) for a watershed with unimproved drainage area; five(5) for a watershed with improved drainage channels; and fifty (50) for a watershed with complete improvement (channels and land grading).

Example 2-4a

Determine peak flow for design of a pond to be located at lower end of a 500-acre watershed; C.N. 70; 24-hour, 25-year frequency rainfall = 6.00 inches; average slope of watershed = 0.4% if (1) it is an unimproved watershed; (2) drainage channels only have been improved; and (3) drainage channels have been improved and land has been graded.

Solution: From Exhibit 2-10 (revised) peak flow = 250 cfs.
Adjustment for land slope = 0.71.

For Case (1) adjustment for ponding (from Table OH2-3 where D.A./Ponding and Swampy Area = 2) = 0.52

For Case 92) adjustment for ponding (from Table OH2-3 where D.A./Ponding and Swampy Area = 5) = 0.60.

Adjusted Peak Flow = 250 x 0.71 x 0.60 = 106 cfs.

For Case (3) adjustment for ponding (from Table OH2-3 where D.A./Ponding and Swamp Area = 50) = 0.83

Adjusted Peak Flow = 250 x 0.71 x 0.83 = 147 cfs.

Example 2-4b

Determine adjusted peak rate of flow from a 500-acre watershed; peak rate of flow of 25-year frequency storm from the completed runoff data sheet Exhibit OH2-1 = 800 cfs for the following conditions:

Five (5)-acre swampy area located immediately above the proposed pond site, no other significant storage areas in watershed.

Solution: Ratio D.A./Swampy Area = 500/5 = 100
Adjustment factor from Table 2-2 = 0.85
Adjusted Peak Flow = 800 x 0.85 = 680 cfs

NOTE: In this case, design the pond to control a peak inflow rate of runoff of 680 cfs. By using flood routing procedures contained in Chapter 11 of this manual and further reduction in peak rate of discharge my be obtained for emergency spillway design.

Example 2-4c

Determine the adjusted peak flow for the design of a grassed waterway (10-year frequency) with an 80-acre watershed if this watershed has 2 ponds located in the upper reaches of the watershed with a total of 2.0 acres of surface area. Peak rate of flow for a 10-year frequency storm from completed runoff data sheet Exhibit OH2-1 = 75 cfs.

Solution: Ratio D.A./Pond Area = 80/2 = 40
Adjustment factor from Table 2-4 = 0.86
Adjusted Peak Flow = 75 x 0.86 = 65 cfs

Table OH2-2 Adjustment Factors Where Ponding and Swampy Areas Occur at Design Point

Ratio	Percent	Frequency					
D.A./Pond and Swampy Area	Pond and Swampy Areas in D.A.	2	5	10	25	50	100
500	0.2	.92	.94	.95	.96	.97	.98
200	0.5	.86	.87	.88	.90	.92	.93
100	1.0	.80	.81	.83	.85	.87	.89
50	2.0	.74	.75	.76	.79	.82	.86
40	2.5	.69	.70	.72	.75	.78	.82
30	3.3	.64	.65	.67	.71	.75	.78
20	5.0	.59	.61	.63	.67	.71	.75
15	6.7	.57	.58	.60	.64	.67	.71
10	10.0	.53	.54	.56	.60	.63	.68
5	20.0	.48	.49	.51	.55	.59	.64

Table OH2-3 Adjustment Factors Where Ponding and Swampy Areas are Spread Throughout Watershed or Occur in Central Parts of Watershed

Ratio	Percent	Frequency					
D.A./Pond and Swampy Area	Pond and Swampy Areas in D.A.	2	5	10	25	50	100
500	0.2	.94	.95	.96	.97	.98	.99
200	0.5	.88	.89	.90	.91	.92*	.94
100	1.0	.83	.84	.86	.87	.88	.90
50	2.0	.78	.79	.81	.83	.85	.87
40	2.5	.73	.74	.76	.78	.81	.84
30	3.3	.69	.70	.71	.74	.77	.81
20	5.0	.65	.66	.68	.72	.75	.78
15	6.7	.62	.63	.65	.69	.72	.75
10	10.0	.58	.59	.61	.65	.68	.71
5	20.0	.53	.54	.56	.60	.63	.68
4	25.0	.50	.51	.53	.57	.61	.66
3	33.3	.47	.49	.50	.54	.59	.64
2	50.0	.45	.47	.48	.52	.57	.62
1	100.0	.43	.45	.46	.50	.55	.61

Table OH2-4 Adjustment Factors Where Ponding and Swampy Areas are Located in Upper Reaches of Watershed

Ratio	Percent	Frequency					
D.A./Pond and Swampy Area	Pond and Swampy Areas in D.A.	2	5	10	25	50	100
500	0.2	.96	.97	.98	.98	.99	.99
200	0.5	.93	.94	.94	.95	.96	.97
100	1.0	.90	.91	.92	.93	.94	.95
50	2.0	.87	.88	.88	.90	.91	.93
40	2.5	.85	.85	.86	.88	.89	.91
30	3.3	.82	.83	.84	.86	.88	.89
20	5.0	.80	.81	.82	.84	.86	.88
15	6.7	.78	.79	.80	.82	.84	.86
10	10.0	.77	.77	.78	.80	.82	.84
5	20.0	.74	.75	.76	.78	.80	.82

RAINFALL-RUNOFF DEPTHS FOR SELECTED RUNOFF CURVE NUMBERS

These tables may be used in lieu of Table 2-2. They have been prepared to eliminate the need for interpolation, which is often necessary with the use of Table 2-2.

Inches of runoff associated with inches of precipitation for various curve numbers as shown in these tables are based on the runoff equation on page 2-4.

If inches of runoff are needed for precipitation amounts greater than 12", refer to Technical Release No. 16.

CURVE 60

Inches \ Tenths	0.0	0.1	0.2	0.3	0.4	0.5	0.6	0.7	0.8	0.9
0										
1	0.00	0.00	0.00	0.00	0.00	0.00	0.01	0.02	0.03	0.04
2	0.06	0.08	0.10	0.12	0.14	0.17	0.20	0.23	0.27	0.30
3	0.33	0.37	0.41	0.45	0.49	0.53	0.57	0.62	0.67	0.72
4	0.76	0.81	0.86	0.91	0.97	1.03	1.08	1.13	1.19	1.25
5	1.30	1.36	1.42	1.48	1.54	1.61	1.67	1.73	1.80	1.86
6	1.92	1.99	2.06	2.12	2.19	2.26	2.33	2.40	2.47	2.54
7	2.61	2.68	2.75	2.82	2.89	2.97	3.04	3.11	3.18	3.26
8	3.34	3.41	3.49	3.56	3.64	3.72	3.79	3.87	3.95	4.05
9	4.10	4.18	4.26	4.34	4.42	4.50	4.58	4.66	4.74	4.82
10	4.90	4.98	5.07	5.15	5.23	5.31	5.39	5.48	5.56	5.64
11	5.73	5.81	5.89	5.98	6.06	6.14	6.22	6.31	6.40	6.48
12	6.57	6.65	6.73	6.82	6.91	6.99	7.08	7.17	7.26	7.34

CURVE 61

1						0.01	0.02	0.03	0.04	0.05
2	0.07	0.09	0.11	0.14	0.17	0.20	0.23	0.26	0.29	0.32
3	0.36	0.40	0.44	0.48	0.52	0.57	0.62	0.67	0.71	0.76
4	0.81	0.86	0.91	0.96	1.02	1.08	1.13	1.19	1.25	1.31
5	1.37	1.43	1.49	1.55	1.61	1.68	1.74	1.81	1.87	1.94
6	2.01	2.07	2.14	2.21	2.28	2.35	2.42	2.49	2.56	2.63
7	2.70	2.77	2.84	2.91	2.98	3.06	3.14	3.22	3.29	3.37
8	3.44	3.52	3.60	3.67	3.75	3.83	3.91	3.99	4.07	4.14
9	4.22	4.30	4.38	4.46	4.54	4.62	4.71	4.79	4.87	4.95
10	5.03	5.11	5.20	5.28	5.36	5.44	5.55	5.61	5.70	5.78
11	5.87	5.95	6.03	6.12	6.20	6.29	6.38	6.46	6.55	6.63
12	6.72	6.80	6.89	6.98	7.06	7.15	7.24	7.33	7.41	7.50

CURVE 62

Inches \ Tenths	0.0	0.1	0.2	0.3	0.4	0.5	0.6	0.7	0.8	0.9
0										
1						0.01	0.02	0.03	0.05	0.07
2	0.09	0.11	0.13	0.16	0.19	0.22	0.25	0.28	0.32	0.36
3	0.40	0.44	0.48	0.52	0.56	0.61	0.66	0.71	0.76	0.81
4	0.86	0.91	0.96	1.02	1.08	1.14	1.20	1.26	1.32	1.38
5	1.44	1.50	1.56	1.62	1.68	1.74	1.81	1.88	1.95	2.02
6	2.09	2.16	2.23	2.30	2.37	2.44	2.51	2.58	2.65	2.72
7	2.80	2.87	2.94	3.02	3.09	3.17	3.24	3.32	3.40	3.48
8	3.55	3.63	3.71	3.79	3.86	3.94	4.02	4.10	4.18	4.26
9	4.34	4.42	4.50	4.59	4.67	4.75	4.83	4.91	5.00	5.08
10	5.16	5.25	5.33	5.41	5.50	5.58	5.66	5.75	5.83	5.92
11	6.00	6.09	6.17	6.26	6.34	6.43	6.52	6.60	6.69	6.77
12	6.86	6.95	7.04	7.13	7.21	7.30	7.39	7.48	7.56	7.65

CURVE 63

1						0.02	0.03	0.04	0.06	0.08
2	0.10	0.12	0.15	0.18	0.21	0.25	0.28	0.32	0.35	0.39
3	0.43	0.47	0.52	0.57	0.61	0.66	0.71	0.76	0.81	0.86
4	0.92	0.98	1.03	1.09	1.15	1.21	1.26	1.32	1.38	1.44
5	1.51	1.58	1.64	1.70	1.76	1.83	1.90	1.97	2.04	2.11
6	2.18	2.25	2.32	2.39	2.47	2.54	2.61	2.68	2.76	2.83
7	2.91	2.98	3.06	3.13	3.21	3.28	3.36	3.44	3.52	3.59
8	3.67	3.75	3.83	3.91	3.99	4.07	4.15	4,23	4.31	4.39
9	4.48	4.56	4.64	4.72	4.80	4.89	4.97	5.05	5.14	5.22
10	5.30	5.39	5.47	5.56	5.64	5.73	5.81	5.90	5.98	6.07
11	6.15	6.24	6.33	6.41	6.50	6.59	6.68	6.76	6.84	6.93
12	7.02	7.11	7.20	7.29	7.38	7.47	7.55	7.64	7.73	7.82

CURVE 64

1	0.00	0.00	0.00	0.00	0.01	0.02	0.03	0.05	0.07	0.09
2	0.11	0.14	0.17	0.20	0.23	0.26	0.30	0.34	0.38	0.42
3	0.47	0.51	0.56	0.60	0.65	0.70	0.75	0.80	0.85	0.91
4	0.97	1.03	1.09	1.15	1.21	1.26	1.32	1.38	1.45	1.51
5	1.58	1.64	1.71	1.77	1.84	1.91	1.98	2.05	2.12	2.19
6	2.26	2.33	2.40	2.48	2.55	2.62	2.70	2.77	2.85	2.92
7	3.00	3.07	3.15	3.23	3.30	3.38	3.46	3.54	3.62	3.69
8	3.77	3.85	3.93	4.01	4.09	4.18	4.26	4.34	4.42	4.50
9	4.59	4.67	4.75	4.84	4.92	5.00	5.09	5.17	5.26	5.34
10	5.43	5.51	5.59	5.68	5.76	5.85	5.94	6.02	6.11	6.20
11	6.28	6.37	6.46	6.55	6.64	6.72	6.81	6.90	6.99	7.07
12	7.16	7.25	7.34	7.43	7.52	7.61	7.70	7.78	7.87	7.96

CURVE 65

Inches \ Tenths	0.0	0.1	0.2	0.3	0.4	0.5	0.6	0.7	0.8	0.9
0										
1	0.00	0.00	0.00	0.01	0.02	0.03	0.04	0.06	0.08	0.10
2	0.13	0.16	0.19	0.23	0.26	0.30	0.33	0.37	0.42	0.46
3	0.50	0.55	0.60	0.65	0.70	0.75	0.80	0.86	0.91	0.97
4	1.03	1.09	1.15	1.21	1.27	1.33	1.39	1.45	1.52	1.58
5	1.65	1.72	1.78	1.85	1.92	1.99	2.06	2.13	2.20	2.28
6	2.35	2.42	2.50	2.57	2.64	2.72	2.80	2.87	2.94	3.02
7	3.10	3.18	3.25	3.33	3.41	3.49	3.57	3.64	3.73	3.81
8	3.89	3.97	4.05	4.13	4.22	4.30	4.38	4.46	4.54	4.62
9	4.71	4.80	4.88	4.96	5.05	5.13	5.22	5.30	5.39	5.47
10	5.56	5.65	5.73	5.82	5.90	5.99	6.08	6.17	6.26	6.34
11	6.43	6.52	6.60	6.69	6.78	6.87	6.96	7.04	7.14	7.23
12	7.31	7.40	7.49	7.58	7.67	7.76	7.85	7.94	8.03	8.12

CURVE 66

1	0.00	0.00	0.01	0.01	0.02	0.04	0.06	0.08	0.10	0.12
2	0.15	0.18	0.21	0.25	0.29	0.33	0.37	0.41	0.45	0.50
3	0.55	0.60	0.65	0.60	0.75	0.80	0.86	0.91	0.97	1.03
4	1.09	1.15	1.21	1.27	1.33	1.39	1.46	1.53	1.59	1.66
5	1.73	1.80	1.87	1.94	2.01	2.08	2.15	2.22	2.29	2.36
6	2.44	2.51	2.59	2.67	2.74	2.82	2.89	2.97	3.05	3.12
7	3.20	3.28	3.36	3.44	3.52	3.60	3.68	3.76	3.84	3.95
8	4.01	4.09	4.17	4.26	4.34	4.43	4.51	4.59	4.67	4.76
9	4.84	4.93	5.01	5.10	5.18	5.27	5.35	5.43	5.50	5.61
10	5.70	5.78	5.87	5.96	6.05	6.13	6.22	6.31	6.40	6.49
11	6.57	6.66	6.75	6.84	6.93	7.02	7.11	7.20	7.29	7.38
12	7.46	7.55	7.64	7.73	7.82	7.92	8.01	8.10	8.19	8.28

CURVE 67

1	0.00	0.00	0.01	0.02	0.03	0.05	0.07	0.09	0.12	0.15
2	0.18	0.21	0.24	0.28	0.32	0.36	0.40	0.44	0.49	0.54
3	0.59	0.64	0.69	0.74	0.79	0.85	0.91	0.97	1.03	1.09
4	1.15	1.21	1.27	1.34	1.40	1.47	1.53	1.60	1.67	1.74
5	1.81	1.88	1.95	2.02	2.09	2.16	2.23	2.31	2.39	2.46
6	2.54	2.61	2.69	2.76	2.84	2.92	3.00	3.08	3.15	3.23
7	3.31	3.39	3.47	3.55	3.64	3.72	3.80	3.88	3.96	4.04
8	4.13	4.21	4.29	4.38	4.46	4.55	4.63	4.71	4.80	4.89
9	4.97	5.06	5.14	5.23	5.31	5.40	5.49	5.58	5.66	5.75
10	5.84	5.92	6.01	6.10	6.19	6.28	6.36	6.45	6.54	6.63
11	6.72	6.81	6.90	6.99	7.08	7.17	7.26	7.35	7.44	7.53
12	7.62	7.71	7.80	7.89	7.98	8.07	8.16	8.25	8.35	8.44

CURVE 68

Inches \ Tenths	0.0	0.1	0.2	0.3	0.4	0.5	0.6	0.7	0.8	0.9
0										
1	0.00	0.01	0.01	0.02	0.04	0.06	0.08	0.11	0.13	0.16
2	0.19	0.23	0.26	0.30	0.34	0.38	0.43	0.48	0.53	0.58
3	0.63	0.68	0.73	0.78	0.84	0.90	0.96	1.02	1.08	1.14
4	1.20	1.26	1.33	1.40	1.47	1.53	1.60	1.67	1.74	1.81
5	1.88	1.95	2.02	2.09	2.16	2.24	2.32	2.39	2.47	2.54
6	2.62	2.70	2.78	2.85	2.93	3.01	3.09	3.17	3.25	3.33
7	3.41	3.49	3.57	3.65	3.73	3.82	3.90	3.99	4.07	4.15
8	4.23	4.32	4.40	4.49	4.57	4.66	4.74	4.83	4.91	5.00
5.	5.09	5.17	5.26	5.35	5.43	5.52	5.61	5.70	5.78	5.87
10	5.96	6.05	6.14	6.23	6.32	6.40	6.49	6.58	6.67	6.76
11	6.85	6.94	7.03	7.12	7.21	7.30	7.39	7.48	7.57	7.66
12	7.76	7.84	7.94	8.03	8.12	8.21	8.31	8.40	8.49	8.58

CURVE 69

1	0.00	0.01	0.02	0.03	0.05	0.07	0.09	0.12	0.15	0.18
2	0.22	0.25	0.29	0.33	0.38	0.42	0.47	0.52	0.57	0.62
3	0.67	0.72	0.78	0.84	0.90	0.96	1.02	1.08	1.14	1.20
4	1.27	1.33	1.40	1.47	1.53	1.60	1.67	1.74	1.81	1.88
5	1.96	2.03	2.10	2.18	2.25	2.33	2.40	2.48	2.56	2.63
6	2.71	2.79	2.87	2.95	3.03	3.11	3.19	3.27	3.35	3.43
7	3.51	3.60	3.68	3.76	3.84	3.95	4.01	4.10	4.18	4.26
8	4.35	4.44	4.52	4.61	4.69	4.78	4.86	4.95	5.04	5.12
9	5.21	5.30	5.39	5.48	5.56	5.65	5.74	5.82	5.91	6.00
10	6.09	6.18	6.27	6.36	6.45	6.54	6.63	6.72	6.81	6.90
11	6.99	7.08	7.17	7.27	7.36	7.45	7.54	7.63	7.72	7.81
12	7.90	7.99	8.09	8.18	8.27	8.37	8.46	8.55	8.64	8.73

CURVE 70

1	0.00	0.01	0.02	0.04	0.06	0.08	0.11	0.14	0.17	0.20
2	0.24	0.28	0.32	0.36	0.40	0.45	0.50	0.55	0.60	0.65
3	0.71	0.77	0.83	0.89	0.95	1.01	1.07	1.13	1.19	1.25
4	1.33	1.40	1.46	1.53	1.60	1.67	1.74	1.81	1.88	1.96
5	2.04	2.11	2.19	2.26	2.33	2.41	2.49	2.57	2.64	2.72
6	2.80	2.88	2.96	3.04	3.13	3.21	3.29	3.37	3.45	3.53
7	3.61	3.70	3.79	3.87	3.95	4.04	4.12	4.20	4.28	4.37
8	4.46	4.55	4.64	4.72	4.81	4.90	4.98	5.07	5.16	5.25
9	5.33	5.42	5.51	5.60	5.69	5.78	5.87	5.96	6.05	6.14
10	6.23	6.32	6.41	6.50	6.59	6.68	6.77	6.86	6.95	7.04
11	7.13	7.22	7.31	7.40	7.49	7.58	7.68	7.77	7.86	7.96
12	8.05	8.14	8.23	8.33	8.42	8.51	8.60	8.70	8.79	8.88

CURVE 71

Inches \ Tenths	0.0	0.1	0.2	0.3	0.4	0.5	0.6	0.7	0.8	0.9
0								0.00	0.00	0.00
1	0.01	0.02	0.03	0.05	0.07	0.10	0.13	0.16	0.19	0.22
2	0.26	0.30	0.34	0.39	0.44	0.49	0.54	0.59	0.64	0.70
3	0.76	0.82	0.88	0.94	1.00	1.06	1.13	1.19	1.26	1.33
4	1.39	1.46	1.53	1.60	1.67	1.74	1.81	1.89	1.97	2.04
5	2.11	2.19	2.27	2.34	2.42	2.50	2.58	2.66	2.74	2.82
6	2.90	2.98	3.06	3.14	3.22	3.30	3.38	3.47	3.55	3.63
7	3.72	3.80	3.88	3.97	4.06	4.14	4.23	4.32	4.40	4.49
8	4.58	4.67	4.75	4.82	4.93	5.02	5.10	5.19	5.28	5.37
9	5.46	5.55	5.64	5.73	5.82	5.90	5.99	6.08	6.17	6.27
10	6.36	6.45	6.54	6.63	6.72	6.81	6.90	6.99	7.08	7.18
11	7.27	7.36	7.45	7.54	7.63	7.73	7.82	7.91	8.01	8.10
12	8.19	8.28	8.38	8.47	8.56	8.65	8.75	8.84	8.94	9.03

CURVE 72

1	0.01	0.02	0.04	0.06	0.08	0.11	0.14	0.17	0.21	0.25
2	0.29	0.33	0.38	0.43	048	0.53	0.58	0.63	0.69	0.75
3	0.81	0.87	0.93	0.99	1.05	1.12	1.19	1.26	1.32	1.39
4	1.46	1.53	1.60	1.68	1.75	1.82	1.89	1.97	2.05	2.12
5	2.19	2.27	2.35	2.43	2.51	2.59	2.67	2.75	2.83	2.91
6	2.99	3.08	3.16	3.24	3.32	3.41	3.49	3.57	3.66	3.75
7	3.83	3.91	4.00	4.08	4.17	4.26	4.35	4.44	4.52	4.61
8	4.69	4.78	4.87	4.96	5.05	5.14	5.23	5.31	5.40	5.49
9	5.58	5.67	5.76	5.85	5.94	6.03	6.13	6.22	6.31	6.40
10	6.49	6.58	6.67	6.76	6.85	6.95	7.04	7.13	7.22	7.31
11	7.40	7.50	7.59	7.69	7.78	7.87	7.96	8.05	8.15	8.25
12	8.34	8.43	8.52	8.62	8.71	8.81	8.90	8.99	9.09	9.18

CURVE 73

0	0.00	0.00	0.00	0.00	0.00	0.00	0.00	0.00	0.00	0.01
1	0.02	0.03	0.05	0.07	0.10	0l3	0.16	0.20	0.24	0.28
2	0.32	0.37	0.41	0.46	0.52	0.57	0.62	0.68	0.74	0.80
3	0.86	0.92	0.98	1.04	1.11	1.18	1.25	1.32	1.39	1.46
4	1.53	1.60	1.67	1.75	1.82	1.90	1.97	2.04	2.12	2.20
5	2.28	2.36	2.44	2.52	2.60	2.68	2.76	2.84	2.92	3.00
6	3.09	3.17	3.25	3.34	3.43	3.51	3.60	3.68	3.76	3.85
7	3.94	4.02	4.11	4.20	4.29	4.37	4.46	4.55	4.64	4.73
8	4.81	4.90	4.99	5.08	5.17	5.26	5.35	5.44	5.53	5.62
19	5.71	5.80	5.89	5.98	6.07	6.16	6.23	6.33	6.44	6.53
10	6.62	6.71	6.81	6.90	6.99	7.08	7.17	7.27	7.36	7.45
11	7.54	7.64	7.73	7.82	7.92	8.01	8.10	8.20	8.29	8.38
12	8.48	8.57	8.67	8.76	8.86	8.95	9.05	9.14	9.23	9.33

CURVE 74

Inches \ Tenths	0.0	0.1	0.2	0.3	0.4	0.5	0.6	0.7	0.8	0.9
0									0.00	0.01
1	0.02	0.04	0.06	0.09	0.12	0.15	0.18	0.21	0.27	0.31
2	0.35	0.40	0.45	0.50	0.55	0.61	0.67	0.73	0.79	0.85
3	0.91	0.97	1.04	1.11	1.18	1.25	1.32	1.38	1.45	1.52
4	1.60	1.68	1.75	1.83	1.90	1.98	2.06	2.13	2.21	2.29
5	2.37	2.45	2.53	2.61	2.69	2.78	2.86	2.94	3.02	3.10
6	3.19	3.28	3.36	3.45	3.53	3.62	3.70	3.79	3.88	3.96
7	4.05	4.14	4.23	4.31	4.39	4.48	4.57	4.66	4.75	4.84
8	4.93	5.02	5.11	5.20	5.29	5.38	5.47	5.56	5.65	5.75
9	5.84	5.93	6.02	6.11	6.20	6.29	6.38	6.47	6.56	6.65
10	6.75	6.84	6.94	7.03	7.12	7.21	7.30	7.40	7.50	7.60
11	7.69	7.79	7.88	7.98	8.07	8.16	8.25	8.35	8.44	8.54
12	8.63	8.73	8.82	8.91	9.00	9.10	9.20	9.30	9.40	9.49

CURVE 75

0	0.00	0.00	0.00	0.00	0.00	0.00	0.00	0.00	0.00	0.01
1	0.03	0.05	0.07	0.10	0.13	0.16	0.20	0.24	0.28	0.33
2	0.38	0.43	0.48	0.53	0.59	0.65	0.71	0.77	0.83	0.89
3	0.95	1.02	1.09	1.16	1.23	1.30	1.37	1.44	1.52	1.59
4	1.67	1.74	1.82	1.89	1.97	2.04	2.12	2.20	2.28	2.36
5	2.44	2.52	2.61	2.69	2.77	2.85	2.94	3.02	3.11	3.19
6	3.27	3.36	3.45	3.53	3.62	3.71	3.79	3.88	3.97	4.06
7	4.15	4.24	4.32	4.40	4.49	4.58	4.67	4.76	4.86	4.95
8	5.04	5.13	5.22	5.31	5.40	5.49	5.58	5.67	5.76	5.85
9	5.94	6.04	6.13	6.22	6.32	6.41	6.50	6.59	6.68	6.78
10	6.87	6.96	7.05	7.15	7.24	7.34	7.43	7.53	7.63	7.73
11	7.83	7.91	8.00	8.10	8.19	8.29	8.38	8.47	8.56	8.66
12	8.76	8.85	8.95	9.04	9.14	9.23	9.32	9.42	9.51	9.61

CURVE 76

0	0.00	0.00	0.00	0.00	0.00	0.00	0.00	0.00	0.01	0.02
1	0.04	0.06	0.08	0.11	0.15	0.19	0.23	0.27	0.31	0.36
2	0.41	0.46	0.51	0.57	0.63	0.69	0.75	0.81	0.88	0.95
3	1.01	1.08	1.15	1.22	1.29	1.36	1.43	1.51	1.58	1.66
4	1.74	1.81	1.89	1.97	2.05	2.13	2.21	2.29	2.37	2.46
5	2.54	2.62	2.70	2.78	2.87	2.95	3.04	3.12	3.21	3.29
6	3.38	3.47	3.55	3.64	3.73	3.81	3.90	3.99	4.08	4.17
7	4.26	4.35	4.44	4.53	4.62	4.71	4.80	4.89	4.98	5.07
8	5.16	5.25	5.34	5.43	5.52	5.61	5.70	5.80	5.89	5.98
9	6.07	6.17	6.26	6.35	6.45	6.54	6.63	6.73	6.82	6.91
10	7.01	7.10	7.19	7.28	7.37	7.47	7.57	7.66	7.75	7.85
11	7.94	8.04	8.14	8.23	8.33	8.42	8.51	8.61	8.71	8.80
12	8.90	8.99	9.08	9.18	9.28	9.37	9.47	9.56	9.66	9.76

CURVE 77

Inches \ Tenths	0.0	0.1	0.2	0.3	0.4	0.5	0.6	0.7	0.8	0.9
0	0.00	0.00	0.00	0.00	0.00	0.00	0.00	0.00	0.01	0.03
1	0.05	0.07	0.10	0.14	0.18	0.22	0.26	0.30	0.34	0.39
2	0.45	0.50	0.56	0.62	0.68	0.74	0.80	0.86	0.95	1.00
3	1.07	1.14	1.21	1.28	1.35	1.43	1.50	1.57	1.65	1.73
4	1.81	1.89	1.97	2.05	2.13	2.21	2.29	2.37	2.45	2.53
5	2.62	2.70	2.79	2.87	2.96	3.04	3.13	3.22	3.30	3.39
6	3.48	3.56	3.65	3.74	3.83	3.92	4.00	4.09	4.18	4.27
7	4.36	4.45	4.54	4.63	4.72	4.81	4.90	5.00	5.09	5.18
8	5.27	5.36	5.45	5.55	5.64	5.73	5.82	5.92	6.01	6.10
9	6.19	6.29	6.38	6.47	6.57	6.66	6.76	6.85	6.94	7.04
10	7.13	7.23	7.32	7.42	7.51	7.60	7.70	7.79	7.89	7.98
11	8.08	8.18	8.27	8.37	8.46	8.55	8.65	8.75	8.84	8.94
12	9.03	9.13	9.23	9.32	9.42	9.51	9.61	9.71	9.81	9.90

CURVE 78

0	0.00	0.00	0.00	0.00	0.00	0.00	0.00	0.01	0.02	0.03
1	0.06	0.09	0.12	0.15	0.19	0.23	0.27	0.32	0.37	0.42
2	0.48	0.54	0.60	0.66	0.72	0.79	0.86	0.93	0.99	1.06
3	1.13	1.20	1.27	1.35	1.43	1.50	1.58	1.65	1.73	1.81
4	1.89	1.97	2.05	2.13	2.22	2.30	2.38	2.46	2.54	2.63
5	2.72	2.81	2.89	2.98	3.06	3.15	3.24	3.32	3.41	3.50
6	3.59	3.67	3.76	3.85	3.94	4.03	4.12	4.22	4.31	4.39
7	4.48	4.58	4.67	4.76	4.85	4.94	5.03	5.12	5.22	5.31
8	5.40	5.49	5.58	5.67	5.77	5.86	5.95	6.05	6.14	6.24
9	6.33	6.43	6.52	6.61	6.71	6.80	6.90	6.99	7.09	7.18
10	7.27	7.37	7.46	7.56	7.65	7.75	7.84	7.94	8.04	8.13
11	8.23	8.33	8.42	8.52	8.61	8.71	8.80	8.90	8.99	9.09
12	9.19	9.28	9.57	9.47	9.56	9.66	9.76	9.86	9.95	10.05

CURVE 79

0	0.00	0.00	0.00	0.00	0.00	0.00	0.00	0.01	0.03	0.05
1	0.07	0.10	0.13	0.17	0.21	0.26	0.31	0.36	0.41	0.46
2	0.52	0.58	0.64	0.70	0.77	0.84	0.91	0.98	1.05	1.12
3	1.19	1.26	1.34	1.42	1.49	1.56	1.64	1.72	1.80	1.88
4	1.96	2.04	2.13	2.21	2.29	2.38	2.46	2.55	2.63	2.72
5	2.80	2.89	2.98	3.07	3.15	3.24	3.32	3.41	3.50	3.59
6	3.68	3.77	3.86	3.95	4.04	4.13	4.22	4.31	4.40	4.49
7	4.58	4.68	4.77	4.86	4.95	5.04	5.13	5.23	5.32	5.42
8	5.51	5.60	5.68	5.78	5.88	5.98	6.07	6.16	6.26	6.35
9	6.45	6.54	6.63	6.73	6.82	6.92	7.01	7.11	7.20	7.30
10	7.39	7.49	7.58	7.68	7.77	7.87	7.97	8.06	8.16	8.25
11	8.35	8.44	8.54	8.64	8.74	8.83	8.92	9.02	9.12	9.22
12	9.31	9.40	9.50	9.60	9.70	9.79	9.89	9.98	10.08	10.18

CURVE 80

Inches \ Tenths	0.0	0.1	0.2	0.3	0.4	0.5	0.6	0.7	0.8	0.9
0	0.00	0.00	0.00	0.00	0.00	0.00	0.00	0.01	0.03	0.05
1	0.08	0.11	0.15	0.19	0.24	0.29	0.34	0.39	0.44	0.50
2	0.56	0.62	0.68	0.75	0.82	0.89	0.96	1.03	1.10	1.17
3	1.25	1.33	1.40	1.48	1.56	1.64	1.72	1.80	1.88	1.96
4	2.04	2.12	2.20	2.29	2.38	2.46	2.55	2.63	2.72	2.81
5	2.89	2.98	3.07	3.16	3.25	3.34	3.43	3.52	3.61	3.69
6	3.78	3.87	3.96	4.05	4.14	4.23	4.32	4.42	4.51	4.60
7	4.69	4.79	4.88	4.97	5.06	5.16	5.25	5.54	5.44	5.53
8	5.62	5.72	5.81	5.91	6.00	6.09	6.19	6.28	6.38	6.47
9	6.57	6.66	6.76	6.85	6.95	7.04	7.14	7.23	7.33	7.43
10	7.52	7.62	7.71	7.81	7.90	8.00	8.10	8.19	8.29	8.38
11	8.48	8.58	8.67	8.77	8.87	8.97	9.06	9.16	9.26	9.35
12	9.45	9.55	9.65	9.75	9.84	9.94	10.04	10.14	10.24	10.33

CURVE 81

0	0.00	0.00	0.00	0.00	0.00	0.00	0.01	0.02	0.04	0.07
1	0.10	0.13	0.17	0.21	0.26	0.31	0.36	0.42	0.48	0.54
2	0.60	0.66	0.73	0.80	0.87	0.94	1.01	1.09	1.16	1.23
3	1.31	1.39	1.47	1.55	1.63	1.71	1.79	1.87	1.95	2.03
4	2.12	2.20	2.29	2.37	2.46	2.55	2.63	2.72	2.81	2.89
5	2.98	3.07	3.16	3.25	3.34	3.43	3.52	3.61	3.70	3.79
6	3.88	3.97	4.06	4.16	4.25	4.34	4.43	4.52	4.61	4.71
7	4.80	4.90	4.99	5.08	5.17	5.27	5.36	5.46	5.55	5.64
8	5.74	5.84	5.93	6.02	6.11	6.20	6.29	6.39	6.49	6.59
9	6.69	6.79	6.88	6.97	7.06	7.15	7.25	7.35	7.45	7.55
10	7.64	7.74	7.84	7.93	8.03	8.12	8.21	8.31	8.41	8.51
11	8.61	8.70	8.79	8.88	8.98	9.08	9.18	9.28	9.38	9.48
12	9.58	9.68	9.77	9.86	9.95	10.05	10.15	10.25	10.35	10.45

CURVE 82

0	0.00	0.00	0.00	0.00	0.00	0.00	0.01	0.03	0.05	0.08
1	0.11	0.15	0.19	0.24	0.29	0.34	0.40	0.46	0.52	0.58
2	0.65	0.72	0.78	0.85	0.92	0.99	1.06	1.14	1.22	1.30
3	1.38	1.46	1.53	1.61	1.69	1.77	1.86	1.94	2.02	2.11
4	2.20	2.29	2.38	2.46	2.55	2.64	2.73	2.81	2.90	2.99
5	3.08	3.17	3.26	3.35	3.44	3.53	3.62	3.71	3.80	3.89
6	3.98	4.07	4.17	4.26	4.35	4.45	4.54	4.63	4.73	4.82
7	4.91	5.01	5.11	5.20	5.29	5.39	5.48	5.57	5.67	5.76
8	5.86	5.95	6.05	6.14	6.24	6.33	6.43	6.53	6.62	6.71
9	6.81	6.91	7.01	7.11	7.21	7.30	7.40	7.49	7.59	7.68
10	7.77	7.87	7.97	8.07	8.17	8.26	8.36	8.46	8.55	8.64
11	8.74	8.84	8.94	9.04	9.14	9.23	9.33	9.42	9.52	9.61
12	9.71	9.81	9.90	10.00	10.10	10.20	10.29	10.39	10.49	10.59

CURVE 83

Inches \ Tenths	0.0	0.1	0.2	0.3	0.4	0.5	0.6	0.7	0.8	0.9
0	0.00	0.00	0.00	0.00	0.00	0.00	0.02	0.04	0.06	0.09
1	0.13	0.17	0.22	0.27	0.32	0.38	0.44	0.50	0.56	0.63
2	0.70	0.76	0.83	0.91	0.98	1.06	1.13	1.21	1.29	1.37
3	1.45	1.53	1.61	1.69	1.77	1.86	1.94	2.03	2.11	2.20
4	2.29	2.37	2.46	2.55	2.64	2.73	2.82	2.91	3.00	3.08
5	3.17	3.26	3.35	3.45	3.54	3.63	3.72	3.81	3.90	4.00
6	4.09	4.18	4.28	4.37	4.46	4.55	4.65	4.74	4.84	4.95
7	5.02	5.12	5.21	5.31	5.40	5.50	5.60	5.69	5.78	5.88
8	5.98	6.07	6.17	6.26	6.36	6.45	6.35	6.65	6.74	6.84
9	6.93	7.03	7.13	7.22	7.32	7.42	7.51	7.61	7.71	7.80
10	7.90	8.00	8.09	8.19	8.29	8.39	8.48	8.58	8.68	8.77
11	8.87	8.97	9.07	9.16	9.26	9.36	9.46	9.56	9.65	9.75
12	9.85	9.94	10.04	10.14	10.24	10.34	10.44	10.53	10.63	10.73

CURVE 84

0	0.00	0.00	0.00	0.00	0.00	0.01	0.02	0.05	0.08	0.11
1	0.15	0.20	0.25	0.30	0.35	0.41	0.48	0.54	0.61	0.68
2	0.74	0.82	0.89	0.97	1.04	1.12	1.20	1.28	1.36	1.44
3	1.52	1.60	1.68	1.77	1.85	1.94	2.03	2.11	2.20	2.29
4	2.37	2.46	2.55	2.64	2.73	2.82	2.91	3.00	3.09	3.18
5	3.27	3.37	3.46	3.55	3.64	3.73	3.82	3.92	4.01	4.11
6	4.20	4.29	4.39	4.48	4.58	4.67	4.76	4.86	4.95	5.05
7	5.14	5.24	5.33	5.43	5.52	5.62	5.71	5.81	5.91	6.00
8	6.10	6.20	6.30	6.39	6.48	6.58	6.68	6.77	6.87	6.97
9	7.06	7.16	7.26	7.35	7.45	7.55	7.65	7.74	7.84	7.94
10	8.03	8.13	8.23	8.33	8.42	8.52	8.61	8.71	8.81	8.91
11	9.01	9.10	9.20	9.30	9.40	9.50	9.60	9.69	9.79	9.89
12	9.99	10.09	10.19	10.28	10.38	10.48	10.57	10.67	10.77	10.87

CURVE 85

0	0.00	0.00	0.00	0.00	0.00	0.01	0.03	0.06	0.09	0.13
1	0.18	0.22	0.28	0.33	0.39	0.45	0.52	0.59	0.65	0.73
2	0.80	0.87	0.95	1.02	1.10	1.18	1.26	1.34	1.42	1.51
3	1.59	1.68	1.76	1.85	1.93	2.02	2.11	2.20	2.28	2.37
4	2.46	2.55	2.64	2.73	2.82	2.91	3.00	3.09	3.19	3.28
5	3.37	3.47	3.56	3.65	3.74	3.84	3.93	4.03	4.12	4.21
6	4.31	4.40	4.50	4.59	5.69	4.78	4.87	4.97	5.06	5.16
7	5.26	5.35	5.45	5.55	5.64	5.74	5.84	5.93	6.03	6.12
8	6.22	6.32	6.41	6.50	6.60	6.70	6.80	6.90	6.99	7.09
9	7.19	7.28	7.38	7.48	7.57	7.67	7.77	7.87	7.97	8.06
10	8.16	8.26	8.35	8.45	8.55	8.65	8.75	8.84	8.94	9.04
11	9.14	9.24	9.33	9.43	9.53	9.63	9.73	9.82	9.92	10.02
12	10.12	10.22	10.32	10.42	10.51	10.61	10.71	10.81	10.91	11.01

CURVE 86

Inches \ Tenths	0.0	0.1	0.2	0.3	0.4	0.5	0.6	0.7	0.8	0.9
0	0.00	0.00	0.00	0.00	0.00	0.02	0.04	0.07	0.11	0.15
1	0.20	0.25	0.30	0.36	0.42	0.49	0.56	0.63	0.70	0.77
2	0.85	0.92	1.00	1.08	1.16	1.24	1.33	1.41	1.49	1.57
3	1.66	1.74	1.83	1.92	2.00	2.09	2.18	2.27	2.36	2.45
4	2.54	2.63	2.72	2.81	2.91	3.00	3.09	3.18	3.28	3.37
5	3.46	3.56	3.65	3.74	3.83	3.93	4.02	4.12	4.21	4.31
6	4.40	4.50	4.59	4.69	4.78	4.88	4.98	5.07	5.17	5.27
7	5.36	5.46	5.55	5.65	5.74	5.84	5.94	6.03	6.13	6.22
8	6.32	6.42	6.52	6.61	6.71	6.81	6.91	7.01	7.10	7.20
9	7.30	7.40	7.50	7.60	7.70	7.79	7.88	7.98	8.08	8.18
10	8.27	8.37	8.47	8.57	8.67	8.76	8.86	8.96	9.06	9.16
11	9.25	9.35	9.45	9.55	9.65	9.75	9.85	9.95	10.05	10.14
12	10.24	10.34	10.44	10.54	10.63	10.73	10.83	10.93	11.03	11.13

CURVE 87

0	0.00	0.00	0.00	0.00	0.00	0.02	0.05	0.08	0.13	0.17
1	0.22	0.28	0.34	0.40	0.47	0.54	0.61	0.69	0.75	0.83
2	0.91	0.98	1.06	1.15	1.23	1.31	1.39	1.47	1.56	1.65
3	1.74	1.83	1.92	2.01	2.09	2.18	2.27	2.36	2.45	2.55
4	2.64	2.73	2.82	2.91	3.01	3.10	3.19	3.28	3.38	3.47
5	3.57	3.67	3.76	3.85	3.95	4.04	4.13	4.23	4.32	4.42
6	4.51	4.61	4.71	4.80	4.90	5.00	5.09	5.19	5.29	5.38
7	5.48	5.58	5.67	5.77	5.87	5.97	6.06	6.16	6.25	6.35
8	6.45	6.55	6.64	6.74	6.84	6.94	7.03	7.13	7.23	7.33
9	7.43	7.52	7.62	7.72	7.81	7.91	8.01	8.11	8.21	8.31
10	8.41	8.51	8.61	8.70	8.80	8.90	9.00	9.10	9.20	9.30
11	9.39	9.49	9.59	9.69	9.78	9.88	9.98	10.08	10.18	10.28
12	10.38	10.47	10.57	10.67	10.77	10.87	10.97	11.07	11.17	11.27

CURVE 88

0	0.00	0.00	0.00	0.00	0.01	0.03	0.06	0.10	0.15	0.20
1	0.25	0.31	0.38	0.44	0.51	0.58	0.65	0.73	0.81	0.88
2	0.96	1.04	1.12	1.21	1.30	1.38	1.47	1.55	1.64	1.73
3	1.82	1.90	1.99	2.08	2.17	2.26	2.35	2.44	2.54	2.63
4	2.72	2.82	2.91	3.00	3.10	3.19	3.29	3.38	3.47	3.57
5	3.66	3.76	3.85	3.95	4.05	4.14	4.23	4.33	4.42	4.52
6	4.62	4.72	4.81	4.91	5.01	5.10	5.20	5.29	5.39	5.49
7	5.58	5.68	5.78	5.88	5.97	6.07	6.17	6.27	6.36	6.46
8	6.56	6.66	6.75	6.85	6.95	7.05	7.15	7.24	7.34	7.44
9	7.54	7.64	7.73	7.83	7.93	8.03	8.13	8.23	8.33	8.43
10	8.53	8.63	8.73	8.83	8.93	9.03	9.12	9.22	9.32	9.42
11	9.51	9.61	9.71	9.81	9.91	10.01	10.11	10.20	10.30	10.40
12	10.50	10.39	10.69	10.79	10.89	10.99	11.09	11.19	11.29	11.39

CURVE 89

Inches \ Tenths	0.0	0.1	0.2	0.3	0.4	0.5	0.6	0.7	0.8	0.9
0	0.00	0.00	0.00	0.00	0.02	0.04	0.08	0.12	0.17	0.22
1	0.28	0.35	0.41	0.48	0.55	0.63	0.71	0.78	0.86	0.94
2	1.03	1.11	1.19	1.28	1.37	1.46	1.54	1.63	1.72	1.81
3	1.90	1.99	2.08	2.17	2.26	2.36	2.45	2.54	2.64	2.73
4	2.82	2.92	3.01	3.11	3.20	3.30	3.59	3.49	3.58	3.68
5	3.77	3.87	3.96	4.06	4.16	4.25	4.35	4.45	4.54	4.64
6	4.74	4.83	4.95	5.02	5.12	5.22	5.32	5.42	5.51	5.61
7	5.71	5.80	5.90	6.00	6.10	6.20	6.30	6.39	6.49	6.59
8	6.69	6.79	6.88	6.98	7.08	7.18	7.28	7.38	7.47	7.57
9	7.67	7.77	7.87	7.97	8.06	8.16	8.26	8.36	8.46	8.56
10	8.66	8.76	8.86	8.95	9.05	9.15	9.25	9.35	9.45	9.55
11	9.65	9.75	9.84	9.94	10.04	10.14	10.24	10.34	10.44	10.54
12	10.64	10.73	10.83	10.93	11.03	11.13	11.23	11.33	11.43	11.53

CURVE 90

0	0.00	0.00	0.00	0.01	0.03	0.06	0.10	0.15	0.20	0.26
1	0.32	0.39	0.46	0.53	0.61	0.69	0.77	0.85	0.93	1.01
2	1.10	1.18	1.27	1.35	1.44	1.53	1.62	1.71	1.80	1.89
3	1.99	2.08	2.17	2.26	2.36	2.45	2.54	2.64	2.73	2.83
4	2.92	3.02	3.11	3.20	3.30	3.40	3.49	3.59	3.69	3.78
5	3.88	3.97	4.07	4.17	4.26	4.36	4.46	4.56	4.65	4.75
6	4.85	4.95	5.04	5.14	5.24	5.34	5.44	5.54	5.63	5.73
7	5.83	5.92	6.02	6.12	6.21	6.31	6.41	6.51	6.61	6.71
8	6.81	6.91	7.01	7.11	7.20	7.30	7.40	7.50	7.60	7.70
9	7.79	7.89	7.99	8.09	8.19	8.29	8.39	8.49	8.58	8.68
10	8.78	8.88	8.98	9.08	9.18	9.28	9.38	9.48	9.57	9.67
11	9.77	9.87	9.97	10.07	10.17	10.27	11.37	10.47	10.57	10.67
12	10.77	10.86	10.96	11.06	11.16	11.26	11.36	11.46	11.56	11.66

CURVE 91

0	0.00	0.00	0.00	0.01	0.03	0.07	0.12	0.17	0.23	0.29
1	0.36	0.43	0.50	0.58	0.66	0.74	0.82	0.91	0.99	1.08
2	1.17	1.25	1.34	1.43	1.52	1.61	1.70	1.80	1.89	1.98
3	2.07	2.16	2.26	2.35	2.44	2.54	2.63	2.73	2.83	2.92
4	3.02	3.11	3.21	3.30	3.40	3.50	3.59	3.69	3.79	3.89
5	3.99	4.08	4.17	4.27	4.37	4.47	4.56	4.66	4.76	4.86
6	4.96	5.05	5.15	5.25	5.34	5.44	5.54	5.64	5.74	5.84
7	5.94	6.04	6.14	6.24	6.34	6.44	6.53	6.63	6.73	6.83
8	6.93	7.03	7.13	7.23	7.33	7.43	7.52	7.62	7.72	7.82
9	7.92	8.02	8.12	8.22	8.31	8.41	8.51	8.61	8.71	8.81
10	8.91	9.01	9.11	9.21	9.31	9.41	9.51	9.61	9.71	9.80
11	9.90	10.00	10.10	10.20	10.30	10.40	10.50	10.60	10.70	10.80
12	10.89	10.99	11.09	11.19	11.29	11.39	11.49	11.59	11.69	11.79

CURVE 92

Inches \ Tenths	0.0	0.1	0.2	0.3	0.4	0.5	0.6	0.7	0.8	0.9
0	0.00	0.00	0.00	0.02	0.05	0.09	0.14	0.20	0.26	0.33
1	0.41	0.48	0.56	0.64	0.72	0.80	0.89	0.97	1.06	1.15
2	1.24	1.33	1.42	1.51	1.60	1.69	1.78	1.88	1.98	2.07
3	2.16	2.26	2.35	2.45	2.54	2.64	2.74	2.83	2.93	3.02
4	3.12	3.22	3.31	3.41	3.51	3.60	3.70	3.80	3.90	4.00
5	4.09	4.19	4.29	4.39	4.48	4.58	4.68	4.78	4.88	4.97
6	5.07	5.17	5.27	5.37	5.47	5.56	5.66	5.76	5.86	5.96
7	6.06	6.15	6.25	6.35	6.45	6.55	6.65	6.75	6.85	6.95
8	7.05	7.15	7.25	7.34	7.44	7.54	7.64	7.74	7.84	7.94
9	8.04	8.14	8.24	8.33	8.43	8.53	8.63	8.73	8.83	8.93
10	9.03	9.13	9.23	9.33	9.43	9.53	9.63	9.73	9.83	9.93
11	10.03	10.13	10.23	10.33	10.42	10.52	10.62	10.72	10.82	10.92
12	11.02	11.12	11.22	11.32	11.42	11.52	11.62	11.72	11.82	11.92

CURVE 93

0	0.00	0.00	0.00	0.03	0.06	0.11	0.17	0.23	0.30	0.38
1	0.45	0.53	0.61	0.70	0.78	0.87	0.96	1.04	1.13	1.22
2	1.32	1.41	1.50	1.59	1.69	1.78	1.88	1.97	2.06	2.16
3	2.26	2.35	2.45	2.54	2.64	2.74	2.83	2.93	3.03	3.12
4	3.22	3.32	3.42	3.51	3.61	3.71	3.81	3.91	4.00	4.10
5	4.20	4.30	4.40	4.50	4.59	4.69	4.79	4.89	4.99	5.09
6	5.18	5.28	5.38	5.48	5.58	5.68	5.78	5.88	5.97	6.07
7	6.17	6.27	6.37	6.47	6.57	6.67	6.77	6.87	6.97	7.07
8	7.17	7.26	7.36	7.46	7.56	7.66	7.76	7.86	7.96	8.06
9	8.16	8.26	8.36	8.46	8.56	8.66	8.75	8.85	8.95	9.05
10	9.15	9.25	9.35	9.45	9.55	9.65	9.75	9.85	9.95	10.05
11	10.15	10.25	10.35	10.45	10.55	10.65	10.75	10.85	10.95	11.05
12	11.14	11.24	11.34	11.44	11.54	11.64	11.74	11.84	11.94	12.04

CURVE 94

0	0.00	0.00	0.01	0.04	0.08	0.14	0.20	0.27	0.34	0.42
1	0.50	0.58	0.67	0.76	0.84	0.93	1.02	1.11	1.21	1.30
2	1.39	1.49	1.58	1.68	1.77	1.87	1.97	2.06	2.15	2.24
3	2.35	2.44	2.54	2.64	2.73	2.83	2.93	3.03	3.13	3.22
4	3.32	3.42	3.52	3.62	3.72	3.81	3.91	4.01	4.11	4.21
5	4.30	4.40	4.50	4.60	4.70	4.80	4.90	5.00	5.10	5.19
6	5.29	5.39	5.49	5.59	5.69	5.79	5.89	5.99	6.09	6.18
7	6.28	6.38	6.48	6.58	6.68	6.78	6.88	6.98	7.08	7.18
8	7.27	7.37	7.47	7.57	7.67	7.77	7.87	7.97	8.07	8.17
9	8.27	8.37	8.47	8.57	8.67	8.77	8.87	8.97	9.07	9.17
10	9.27	9.37	9.47	9.57	9.67	9.77	9.87	9.97	10.07	10.17
11	10.27	10.37	10.47	10.57	10.66	10.76	10.86	10.96	11.06	11.16
12	11.26	11.36	11.46	11.56	11.66	11.76	11.86	11.96	12.06	12.16

CURVE 95

Inches \ Tenths	0.0	0.1	0.2	0.3	0.4	0.5	0.6	0.7	0.8	0.9
0	0.00	0.00	0.01	0.05	0.11	0.17	0.24	0.32	0.40	0.48
1	0.56	0.65	0.74	0.83	0.92	1.01	1.11	1.20	1.30	1.39
2	1.48	1.58	1.68	1.78	1.87	1.97	2.07	2.16	2.26	2.36
3	2.44	2.54	2.64	2.74	2.84	2.93	3.03	3.13	3.23	3.32
4	3.42	3.52	3.62	3.72	3.82	3.92	4.02	4.12	4.21	4.31
5	4.41	4.51	4.61	4.71	4.81	4.91	5.01	5.11	5.21	5.30
6	5.40	5.50	5.60	5.70	5.80	5.90	6.00	6.10	6.20	6.30
7	6.40	6.50	6.60	6.70	6.80	6.90	7.00	7.10	7.19	7.29
8	7.39	7.49	7.59	7.69	7.79	7.89	7.99	8.09	8.19	8.29
9	8.39	8.49	8.59	8.69	8.79	8.89	8.99	9.09	9.19	9.29
10	9.39	9.49	9.59	9.69	9.79	9.89	9.99	10.09	10.19	10.29
11	10.39	10.49	10.59	10.69	10.79	10.89	10.99	11.09	11.19	11.29
12	11.39	11.49	11.59	11.69	11.79	11.89	11.99	12.09	12.19	12.29

CURVE 96

0	0.00	0.01	0.04	0.08	0.14	0.22	0.29	0.37	0.46	0.5S5
1	0.64	0.73	0.82	0.91	1.01	1.10	1.20	1.29	1.39	1.48
2	1.58	1.68	1.77	1.87	1.97	2.07	2.17	2.26	2.36	2.46
3	2.56	2.66	2.76	2.86	2.95	3.05	3.15	3.25	3.35	3.45
4	3.55	3.65	3.75	3.85	3.95	4.05	4.14	4.24	4.34	4.44
5	4.54	4.64	4.74	4.84	4.94	5.04	5.14	5.24	5.34	5.44
6	5.54	5.64	5.74	5.84	5.93	6.03	6.13	6.23	6.33	6.43
7	6.53	6.63	6.73	6.83	6.93	7.03	7.13	7.23	7.33	7.43
8	7.53	7.63	7.73	7.83	7.93	8.03	8.13	8.23	8.33	8.43
9	8.53	8.63	8.73	8.83	8.93	9.03	9.13	9.23	9.33	9.43
10	9.53	9.63	9.73	9.83	9.93	10.03	10.13	10.23	10.32	10.42
11	10.52	10.62	10.72	10.82	10.92	11.02	11.12	11.22	11.32	11.42
12	11.52	11.62	11.72	11.82	11.92	12.02	12.12	12.22	12.32	12.42

CURVE 97

0	0.00	0.00	0.04	0.11	0.18	0.26	0.35	0.44	0.53	0.62
1	0.71	0.81	0.90	1.00	1.10	1.19	1.29	1.39	1.49	1.58
2	1.68	1.78	1.88	1.98	2.08	2.17	2.27	2.37	2.47	2.57
3	2.67	2.77	2.87	2.97	3.07	3.16	3.26	3.36	3.46	3.56
4	3.66	3.76	3.86	3.96	4.06	4.16	4.26	4.36	4.46	4.56
5	4.66	4.76	4.86	4.96	5.06	5.16	5.26	5.36	5.46	5.55
6	5.65	5.75	5.85	5.95	6.05	6.15	6.25	6.35	6.45	6.55
7	6.65	6.75	6.85	6.95	7.05	7.15	7.25	7.35	7.45	7.55
8	7.65	7.75	7.85	7.95	8.05	8.15	8.25	8.35	8.45	8.55
9	8.65	8.75	8.85	8.95	9.05	9.15	9.25	9.35	9.45	9.55
10	9.65	9.75	9.85	9.95	10.05	10.15	10.25	10.35	10.45	10.55
11	10.65	10.75	10.85	10.95	11.05	11.15	11.25	11.35	11.45	11.55
12	11.65	11.75	11.85	11.95	12.05	12.15	12.25	12.35	12.45	12.55

CURVE 98

Inches \ Tenths	0.0	0.1	0.2	0.3	0.4	0.5	0.6	0.7	0.8	0.9
0	0.00	0.01	0.07	0.15	0.23	0.32	0.41	0.51	0.60	0.69
1	0.79	0.89	0.99	1.09	1.19	1.28	1.38	1.48	1.58	1.68
2	1.78	1.88	1.98	2.08	2.18	2.27	2.37	2.47	2.57	2.67
3	2.77	2.87	2.97	3.07	3.17	3.27	3.37	3.47	3.57	3.67
4	3.77	3.87	3.97	4.07	4.17	4.27	4.37	4.47	4.57	4.67
5	4.77	4.87	4.97	5.07	5.17	5.27	5.37	5.47	5.57	5.67
6	5.77	5.87	5.97	6.07	6.17	6.27	6.37	6.47	6.57	6.67
7	6.77	6.87	6.98	7.07	7.17	7.27	7.37	7.47	7.57	7.67
8	7.76	7.86	7.96	8.06	8.16	8.26	8.36	8.46	8.56	8.66
9	8.76	8.86	8.96	9.06	9.16	9.26	9.36	9.46	9.56	9.66
10	9.76	9.86	9.96	10.06	10.16	10.26	10.36	10.46	10.56	10.66
11	10.76	10.86	10.96	11.06	11.16	11.26	11.36	11.46	11.56	11.66
12	11.76	11.86	11.96	12.06	12.16	12.26	12.36	12.46	12.56	12.66

GENERAL RELATIONSHIP OF SYSTEMS USED FOR CLASSIFYING SOIL SAMPLES

USDA Texture Class and Symbol	Unified Symbol	AASHO Symbol	Soil Properties 2/ Related to Classification
Clay; silty clay	CH	A-7	High shrink-swell clays
"c"; "sic"	MH	A-7	Mica, iron oxide, kaolinitic clays
	CL	A-7	Low LL. Generally clay < 45%
Silty clay loam	CL	A-7	Low LL. Plastic (A-6 clay < 30%)
"sicl"	ML-CL	A-7	Low LL. Mod. plastic. (A-6 clay < 30%)
	CH	A-7	High LL. High shrink-swell clays
	MH	A-7	High LL. Mica, iron oxide, kaolinitic
Clay loam	CL	A-6 or A-7	Low LL. Plastic
"cl"	ML-CL	A-6	Low LL. Moderately plastic
	CH	A-7	High LL. High shrink-swell clays
	MH	A-7	High LL. Mica, iron oxide, kaolinitic
Loam	ML-CL	A-4	Moderately plastic (A-6 clay > 21%)
"l"	CL	A-6	Plastic (A-4 clay < 22%)
	ML	A-4	Low plasticity. (A-7 clay > 21%)
Silt loam	ML-CL	A-4	Moderately plastic. (A-6 clay > 21%)
"sil"	ML	A-4	Low plasticity. (A-7 clay > 21%)
	CL	A-6	Plastic
Silt "si"	ML	A-4	Low plasticity
Sandy clay	CL	A-7	Over 50% fines
"sc"	SC	A-7	50% or less fines
Sandy clay loam	SC	A-6	Plastic. 36 to 50% fines
"scl"	SC	A-2-6	Plastic. 35% or less fines
	CL	A-6	Plastic. Over 50% fines
Sandy loam	SM	A-2-4	Low plasticity
"sl"	SC	A-2-4	Plastic
	SM-SC	A-2-4	Moderately plastic
Fine sandy loam	SM	A-4	Nonplastic. 50% or less fines
"fsl"	ML	A-4	Nonplastic. Over 50% fines
	ML-CL	A-4	Moderately plastic. Over 50% fines
	SM-SC	A-4	Moderately plastic. 50% or less fines
V.F. sandy loam	ML-CL	A-4	Moderately plastic
"vfsl"	ML	A-4	Low plasticity
Loamy sands	SM	A-2-4	Nonplastic. 35% or less fines
"ls"; "lfs"	SM-SC	A-2-4	Moderately plastic. 35% or less fines
"lvfs"	SM	A-4	Low plasticity. Over 35% fines
Sand; fine sand	SP-SM	A-3	5 to 10% fines (approx.)
"s", "fs"	SM	A-2-4	Over 10% fines (approx.)
	SP	A-3	Less than 5% fines
V.F. sand – "vfs"	SM	A-2-4	Low plasticity
Coarse sand	SP	A-1	Less than 5% fines
"cs"	SP-SM	A-1	5 to 12% fines
	SM	A-1	13 to 25% fines
	SM	A-2-4	Over 25% fines

Gravel "G"	GP; GW	A-1	Less than 5% fines
50% pass #200	GM or GC	A-1	5 to 25% fines
50% of coarse	GM or GC	A-2	26 to 35% fines
pass #4 sieve	GM	A-4	Over 35% fines
	GC	A-6	Over 35% fines

1/ To be used as a guide for classifying soils where engineering test data are not available.
2/ Percent clay based on soil characterization test data. Minerals, plasticity, liquid limit based on field identification tests, EFM, Chapter 4, beginning on page 4-20.

ORIENTATION OF VIEWS FOR ENGINEERING DRAWINGS

Plan Views

Plan views are drawn so the direction of stream flow is from left to right or towards the top of the sheet.

Cross Sections – Parallel to Stream

These are drawn so the upstream end of sections are on the left hand side of the sheet (flow left to right).

Cross Sections – Normal to Stream

These are drawn so they are viewed from upstream (looking downstream). When this is not practical, the orientation may be changed to give the true perspective and the position of the viewer stated in the title of the view (e.g. "looking upstream").

Channel – Profiles

These are drawn so the stations increase from left to right.

Channel – Cross Sections

These are drawn as though viewed in the direction of increasing stations.

ROCK CHUTE DESIGN CHARTS

The rock chute design charts in this exhibit are designed for use with Standard, Drawing OH-N-308 for the design of small rock riprap lined chutes.

Design Criteria:

Rock chutes can be designed as full flow open structures or island type structures. Minimum capacity shall be determined from the tables in Ohio Engineering Standard, Grade Stabilization Structure – 410.

The design charts in this exhibit include one (1) foot of freeboard in the entrance and chute depth. This will provide adequate safety for full flow open structures that may experience flows greater than design.

Island type structures require an emergency spillway. The crest of the emergency spillway shall be set at an elevation equal to the chute entrance plus the entrance design flow depth. Entrance design flow depth equals the chart value d_e minus the freeboard (1-foot).

The structure must be designed to fit the site. Other important factors to consider in selecting the shape and elevations are: waterway depth and width at entrance, low bank elevation, topography, projection into the field, and economics.

Chute slopes shall be 4:1, 5:1, 6:1, or 8:1.

Chute side slopes shall be 2:1, 3:1, or 4:1.

The entrance apron shall have a minimum length of 10 feet and be flared out to twice the design bottom width at the upstream edge.

The exit apron shall be a minimum length of 2 times the structure overfall (F).

The rock riprap shall be placed at a minimum depth of 18 inches.

Rock riprap must have a well-graded size distribution. The design charts are based on a d_{50} of the riprap equal to 80 pounds. Riprap with rocks of uniform size or with a skip graded mixture shall be avoided.

Table 1 provides the gradation required.

RIPRAP GRADATION	
Weights of Individual Pieces	% Number of Pieces
150 – 200 lbs.	4
100 – 150 lbs.	6
50 – 100 lbs.	20
10 – 50 lbs.	30
0 – 10 lbs.	40

Table 1

The bedding material shall be placed at a minimum depth of 6 inches.

Bedding gradation shall be small enough to prevent erosion of the underlying soil and it must be large enough to prevent movement through the riprap. In some cases it may be necessary to use a two layer bedding with the smaller sized bedding placed on the foundation material and the larger sized bedding directly below the riprap.

Bedding shall meet the gradation requirements of Table 2.

GRAVEL BEDDING (equivalent to ODDT No. 57)	
Size – Inches	% Passing
1 ½	100
1	95 – 100
½	25 – 60
No. 4	0 – 10
No. 8	0 - 5

Table 2

Structures with a chute design capacity exceeding 100 CFS must be designed on an individual basis. Consult the area engineer for assistance.

Chart Definitions:

Q = Design flow capacity of structure in cubic feet per second (CFS).
V = Velocity in chute in feet per second (FPS).
De = Depth of flow plus 1 foot freeboard at the entrance in feet.
Dc = Depth of flow plus 1 feet freeboard in the chute in feet.

Any combination of chute slopes, side slopes, and bottom widths for which values of V, d_e, and d_c are given in the charts may be used. The entrance and exit aprons must be proportioned to fit the individual site.

Example: Peak discharge = 50 CFS

Acceptable Solutions:	**Chute Slope**	**Side Slope**	**Bottom Width**
	4:1	4:1	6
	5:1	3:1	5,6,8
	5:1	4:1	3,4,5,6,8
	6:1	2:1	8
	6:1	3:1	4,5,6,8
	6:1	4:1	3,4,5,6,8
	8:1	2:1	3,4,5,6,8
	8:1	3:1	3,4,5,6,8
	8:1	4:1	3,4,5,6,8

Construction Note:

The success of a rock riprap chute can be greatly increased if several construction techniques are followed. First the proper gradation of good durable rock riprap must be used.

Second, the riprap must be placed in such a manner to obtain a solid, compact layer. This may require some hand placing and tamping with the construction equipment.

Third, the rock layer needs to reach an "aged condition" as soon as possible. This can be obtained by spreading gravel or soil over the riprap surface to fill the voids. Seeding the entire riprap surface with grass will also help.

ROCK CHUTE DESIGN CHART
Chute Slope = 4:1 (25.0%)
n = 0.04

Q		Side Slope = 2:1						Side Slope 3:1						Side Slope 4:1					
		Bottom Width – Ft.						Bottom Width – Ft.						Bottom Width – Ft.					
		3	4	5	6	8	10	3	4	5	6	8	10	3	4	5	6	8	10
10	V	7.7	7.5	-	-	-	-	7.6	7.4	-	-	-	-	7.3	7.0	-	-	-	-
	d_e	1.6	1.5	-	-	-	-	1.6	1.5	-	-	-	-	1.5	1.5	-	-	-	-
	d_c	1.4	1.3	-	-	-	-	1.3	1.3	-	-	-	-	1.3	1.3	-	-	-	-
15	V	9.0	8.6	8.0	-	-	-	8.6	8.2	7.6	-	-	-	8.8	7.9	7.5	-	-	-
	d_e	1.8	1.7	1.6	-	-	-	1.7	1.6	1.6	-	-	-	1.7	1.6	1.6	-	-	-
	d_c	1.4	1.4	1.3	-	-	-	1.4	1.4	1.3	-	-	-	1.4	1.4	1.3	-	-	-
20	V	10.0	9.3	8.9	-	-	-	9.1	9.1	8.6	-	-	-	8.7	8.6	8.3	-	-	-
	d_e	1.9	1.8	1.7	-	-	-	1.8	1.8	1.7	-	-	-	1.8	1.7	1.7	-	-	-
	d_c	1.5	1.4	1.4	-	-	-	1.5	1.4	1.4	-	-	-	1.5	1.4	1.4	-	-	-
25	V	-	10.0	9.4	9.2	-	-	10.0	9.6	9.2	8.9	-	-	9.2	9.0	8.7	8.7	-	-
	d_e	-	1.9	1.8	1.8	-	-	1.9	1.9	1.8	1.7	-	-	1.9	1.8	1.7	1.7	-	-
	d_c	-	1.5	1.5	1.4	-	-	1.5	1.5	1.4	1.4	-	-	1.5	1.5	1.4	1.4	-	-
30	V	-	-	10.0	9.4	-	-	-	10.1	9.7	9.6	-	-	10.0	9.5	9.3	9.3	-	-
	d_e	-	-	1.9	1.8	-	-	-	1.9	1.9	1.8	-	-	2.0	1.9	1.8	1.8	-	-
	d_c	-	-	1.5	1.5	-	-	-	1.5	1.5	1.4	-	-	1.6	1.5	1.5	1.4	-	-

V = Velocity, d_e = Entrance Depth, d_c = Critical Depth

ROCK CHUTE DESIGN CHART
Chute Slope = 4:1 (25.0%)
n = 0.04

Q		Side Slope = 2:1						Side Slope 3:1						Side Slope 4:1					
		Bottom Width – Ft.						Bottom Width – Ft.						Bottom Width – Ft.					
		3	4	5	6	8	10	3	4	5	6	8	10	3	4	5	6	8	10
35	V							-	-	10.3	10.0	-	-	10.3	10.3	9.8	9.7	-	-
	d_e							-	-	1.9	1.9	-	-	2.0	2.0	1.9	1.8	-	-
	d_c							-	-	1.9	1.9	-	-	1.6	1.6	1.5	1.5	-	-
40	V							-	-	10.4	10.4	-	-	10.7	10.4	10.1	10.0	-	-
	d_e							-	-	-	1.9	-	-	2.1	2.0	2.0	1.9	-	-
	d_c							-	-	-	1.5	-	-	1.7	1.6	1.6	1.5	-	-
45	V														-	10.6	10.5	-	-
	d_e														-	2.0	2.0	-	-
	d_c														-	1.6	1.5	-	-
50	V														-	-	10.6	-	-
	d_e														-	-	2.0	-	-
	d_c														-	-	1.6	-	-
60	V														-	-	-	10.9	-
	d_e														-	-	-	2.0	-
	d_c														-	-	-	1.5	-

V = Velocity, d_e = Entrance Depth, d_c = Critical Depth

ROCK CHUTE DESIGN CHART
Chute Slope = 5:1 (20.0%)
n = 0.04

Q		Side Slope = 2:1						Side Slope 3:1						Side Slope 4:1					
		Bottom Width – Ft.						Bottom Width – Ft.						Bottom Width – Ft.					
		3	4	5	6	8	10	3	4	5	6	8	10	3	4	5	6	8	10
10	V	7.5	7.2	-	-	-	-	7.2	6.8	-	-	-	-	6.7	6.4	-	-	-	-
	d_e	1.6	1.5	-	-	-	-	1.6	1.5	-	-	-	-	1.5	1.5	-	-	-	-
	d_c	1.4	1.3	-	-	-	-	1.4	1.3	-	-	-	-	1.3	1.3	-	-	-	-
15	V	8.3	7.8	7.3	-	-	-	7.8	7.4	7.1	-	-	-	7.4	7.2	6.7	-	-	-
	d_e	1.8	1.7	1.6	-	-	-	1.7	1.6	1.6	-	-	-	1.7	1.6	1.6	-	-	-
	d_c	1.5	1.4	1.4	-	-	-	1.5	1.4	1.4	-	-	-	1.4	1.4	1.4	-	-	-
20	V	9.1	8.6	8.2	-	-	-	8.7	8.3	8.1	-	-	-	8.0	7.9	7.6	-	-	-
	d_e	1.9	1.8	1.7	-	-	-	1.8	1.8	1.7	-	-	-	1.8	1.7	1.7	-	-	-
	d_c	1.5	1.5	1.4	-	-	-	1.5	1.5	1.4	-	-	-	1.5	1.4	1.4	-	-	-
25	V	9.7	9.3	8.7	8.5	-	-	8.9	8.9	8.3	8.2	-	-	8.4	8.3	8.0	7.9	-	-
	d_e	2.0	1.9	1.8	1.7	-	-	1.9	1.9	1.8	1.7	-	-	1.9	1.8	1.7	1.7	-	-
	d_c	1.6	1.5	1.5	1.4	-	-	1.6	1.5	1.5	1.4	-	-	1.6	1.5	1.5	1.4	-	-
30	V	10.3	10.0	9.3	9.2	-	-	9.5	9.4	9.2	8.8	-	-	9.0	8.8	8.6	8.5	-	-
	d_e	2.1	2.0	1.9	1.8	-	-	2.0	1.9	1.9	1.8	-	-	2.0	1.9	1.8	1.8	-	-
	d_c	1.7	1.6	1.5	1.5	-	-	1.6	1.6	1.5	1.5	-	-	1.6	1.6	1.5	1.5	-	-

V = Velocity, d_e = Entrance Depth, d_c = Critical Depth

ROCK CHUTE DESIGN CHART
Chute Slope = 5:1 (20.0%)
n = 0.04

Q		Side Slope = 2:1						Side Slope 3:1						Side Slope 4:1					
		Bottom Width – Ft.						Bottom Width – Ft.						Bottom Width – Ft.					
		3	4	5	6	8	10	3	4	5	6	8	10	3	4	5	6	8	10
35	**V**	-	10.4	9.8	9.6	-	-	10.4	9.8	9.6	9.3	-	-	9.4	9.3	9.1	9.0	-	-
	d_e	-	2.1	2.0	1.9	-	-	2.2	2.0	1.9	1.9	-	-	2.1	2.0	1.9	1.8	-	-
	d_c	-	1.6	1.6	1.5	-	-	1.7	1.6	1.6	1.5	-	-	1.7	1.6	1.5	1.5	-	-
40	**V**	-	-	10.3	10.0	-	-	-	9.9	9.7	9.7	-	-	9.9	9.7	9.4	9.4	-	-
	d_e	-	-	2.1	2.0	-	-	-	2.1	2.0	1.9	-	-	2.1	2.0	2.0	1.9	-	-
	d_c	-	-	1.6	1.6	-	-	-	1.7	1.6	1.5	-	-	1.7	1.6	1.6	1.5	-	-
45	**V**	-	-	-	10.4	9.8	-	-	10.3	10.0	10.0	-	-	10.2	10.1	9.7	9.5	-	-
	d_e	-	-	-	2.1	1.9	-	-	2.2	2.1	2.0	-	-	2.2	2.1	2.0	2.0	-	-
	d_c	-	-	-	1.6	1.5	-	-	1.7	1.7	1.6	-	-	1.7	1.7	1.6	1.6	-	-
50	**V**							-	-	10.4	10.3	9.8	-	10.5	10.3	9.9	9.7	9.5	-
	d_e							-	-	2.2	2.1	1.9	-	2.3	2.2	2.1	2.0	1.9	-
	d_c							-	-	1.7	1.6	1.5	-	1.8	1.7	1.7	1.6	1.5	-
60	**V**							-	-	-	-	10.4	-	-	10.8	10.6	10.4	10.0	-
	d_e							-	-	-	-	2.0	-	-	2.3	2.2	2.1	2.0	-
	d_c							-	-	-	-	1.6	-	-	1.8	1.7	1.7	1.6	-

V = Velocity, d_e = Entrance Depth, d_c = Critical Depth

ROCK CHUTE DESIGN CHART
Chute Slope = -6:1 (16.7%)
n = 0.0-4

Q		Side Slope = 2:1						Side Slope 3:1						Side Slope 4:1					
		Bottom Width – Ft.						Bottom Width – Ft.						Bottom Width – Ft.					
		3	4	5	6	8	10	3	4	5	6	8	10	3	4	5	6	8	10
10	**V**	7.0	6.7	-	-	-	-	6.6	6.5	-	-	-	-	6.5	6.2	-	-	-	-
	d_e	1.6	1.5	-	-	-	-	1.6	1.5	-	-	-	-	1.5	1.5	-	-	-	-
	d_c	1.4	1.3	-	-	-	-	1.4	1.3	-	-	-	-	1.4	1.3	-	-	-	-
15	**V**	7.7	7.4	7.1	-	-	-	7.4	7.2	6.9	-	-	-	7.2	6.9	6.7	-	-	-
	d_e	1.8	1.7	1.6	-	-	-	1.7	1.6	1.6	-	-	-	1.7	1.6	1.6	-	-	-
	d_c	1.5	1.4	1.4	-	-	-	1.5	1.4	1.4	-	-	-	1.4	1.4	1.4	-	-	-
20	**V**	8.7	8.0	7.5	7.4	-	-	8.0	7.9	7.6	7.2	-	-	7.6	7.4	7.3	-	-	-
	d_e	1.8	1.8	1.7	1.6	-	-	1.8	1.8	1.7	1.6	-	-	1.7	1.7	1.7	-	-	-
	d_c	1.6	1.5	1.5	1.4	-	-	1.5	1.5	1.4	1.4	-	-	1.5	1.5	1.4	-	-	-
25	**V**	9.5	8.9	8.3	8.1	-	-	8.7	8.4	8.1	7.7	-	-	8.1	7.9	7.7	7.5	-	-
	d_e	2.0	1.9	1.8	1.7	-	-	1.9	1.9	1.8	1.7	-	-	1.9	1.8	1.7	1.7	-	-
	d_c	1.6	1.6	1.5	1.5	-	-	1.6	1.5	1.5	1.4	-	-	1.6	1.5	1.5	1.4	-	-
30	**V**	9.7	9.4	8.8	8.6	-	-	8.8	8.8	8.6	8.4	-	-	8.6	8.4	8.1	8.1	-	-
	d_e	2.1	2.0	1.9	1.8	-	-	2.0	1.9	1.9	1.8	-	-	2.0	1.9	1.8	1.8	-	-
	d_c	1.7	1.6	1.6	1.5	-	-	1.7	1.6	1.5	1.5	-	-	1.6	1.6	1.5	1.5	-	-

V = Velocity, d_e = Entrance Depth, d_c = Critical Depth

ROCK CHUTE DESIGN CHART
Chute Slope = 6:1 (16.7%)
n = 0.04

Q		Side Slope = 2:1						Side Slope 3:1						Side Slope 4:1					
		Bottom Width – Ft.						Bottom Width – Ft.						Bottom Width – Ft.					
		3	4	5	6	8	10	3	4	5	6	8	10	3	4	5	6	8	10
35	V	-	9.8	9.2	9.0	-	-	9.2	9.0	8.9	8.7	-	-	9.0	8.7	8.4	8.3	-	-
	d_e	-	2.1	2.0	1.9	-	-	2.1	2.0	1.9	1.9	-	-	2.1	2.0	1.9	1.8	-	-
	d_c	-	1.7	1.6	1.6	-	-	1.7	1.7	1.6	1.5	-	-	1.7	1.6	1.6	1.5	-	-
40	V	-	-	9.8	9.4	-	-	9.8	9.4	9.4	9.1	-	-	9.3	9.1	8.8	8.7	-	-
	d_e	-	-	2.1	2.0	-	-	2.2	2.1	2.0	1.9	-	-	2.1	2.0	2.0	1.9	-	-
	d_c	-	-	1.7	1.6	-	-	1.8	1.7	1.6	1.6	-	-	1.7	1.7	1.6	1.6	-	-
45	V	-	-	-	9.8	9.4	-	10.2	9.8	9.6	9.4	9.1	-	9.6	9.5	9.1	8.9	8.6	-
	d_e	-	-	-	2.1	1.9	-	2.3	2.2	2.1	2.0	1.9	-	2.2	2.1	2.0	2.0	1.9	-
	d_c	-	-	-	1.6	1.5	-	1.8	1.7	1.7	1.6	1.5	-	1.8	1.7	1.7	1.6	1.5	-
50	V	-	-	-	-	9.6	-	-	10.3	9.9	9.7	9.2	-	9.9	9.7	9.5	9.3	8.9	-
	d_e	-	-	-	-	2.0	-	-	2.2	2.2	2.1	1.9	-	2.3	2.2	2.1	2.0	1.9	-
	d_c	-	-	-	-	1.6	-	-	1.8	1.7	1.7	1.6	-	1.8	1.7	1.7	1.6	1.6	-
60	V							-	-	-	10.2	9.8	-	10.3	10.2	9.8	9.7	9.4	-
	d_e							-	-	-	2.2	2.0	-	2.4	2.3	2.2	2.1	2.0	-
	d_c							-	-	-	1.7	1.6	-	1.9	1.8	1.8	1.7	1.6	-

V = Velocity, d_e = Entrance Depth, d_c = Critical Depth

ROCK CHUTE DESIGN CHART
Chute Slope = 6:1 (16.7%)
n = 0.04

Q		Side Slope = 2:1						Side Slope 3:1						Side Slope 4:1					
		Bottom Width – Ft.						Bottom Width – Ft.						Bottom Width – Ft.					
		3	4	5	6	8	10	3	4	5	6	8	10	3	4	5	6	8	10
70	V							-	-	-	-	10.3	-	10.8	10.8	10.5	10.4	10.0	-
	d_e							-	-	-	-	2.1	-	2.5	2.4	2.3	2.2	2.1	-
	d_c							-	-	-	-	1.7	-	2.0	1.9	1.8	1.8	1.7	-
80	V							-	-	-	-	-	10.3	11.1	11.0	10.7	10.5	10.2	-
	d_e							-	-	-	-	-	2.1	2.6	2.5	2.4	2.3	2.2	-
	d_c							-	-	-	-	-	1.7	2.0	1.9	1.9	1.8	1.7	-
90	V													11.6	11.4	10.9	10.7	10.7	10.4
	d_e													2.7	2.6	2.5	2.4	2.3	2.2
	d_c													2.1	2.0	1.9	1.9	1.8	1.7
100	V													11.9	11.8	11.4	-	-	-
	d_e													2.7	2.6	2.6	-	-	-
	d_c													2.1	2.0	2.0	-	-	-
110	V													12.1	12.1	11.7	-	-	-
	d_e													2.8	2.7	2.6	-	-	-
	d_c													2.2	2.1	2.0	-	-	-

V = Velocity, d_e = Entrance Depth, d_c = Critical Depth

ROCK CHUTE DESIGN CHART
Chute Slope = 8:1 (12.5%)
n = 0.04

Q		Side Slope = 2:1						Side Slope 3:1						Side Slope 4:1					
		Bottom Width – Ft.						Bottom Width – Ft.						Bottom Width – Ft.					
		3	4	5	6	8	10	3	4	5	6	8	10	3	4	5	6	8	10
10	**V**	6.2	6.1	-	-	-	-	6.0	5.9	-	-	-	-	5.8	5.5	-	-	-	-
	d_e	1.6	1.5	-	-	-	-	1.6	1.5	-	-	-	-	1.5	1.5	-	-	-	-
	d_c	1.4	1.4	-	-	-	-	1.4	1.3	-	-	-	-	1.4	1.3	-	-	-	-
15	**V**	7.1	6.8	6.5	-	-	-	6.7	6.6	6.2	-	-	-	6.4	6.3	6.1	-	-	-
	d_e	1.8	1.7	1.6	-	-	-	1.7	1.6	1.6	-	-	-	1.7	1.6	1.6	-	-	-
	d_c	1.5	1.5	1.4	-	-	-	1.5	1.4	1.4	-	-	-	1.5	1.4	1.4	-	-	-
20	**V**	7.9	7.5	7.0	6.8	-	-	7.4	7.1	7.0	6.6	-	-	7.0	6.7	6.5	6.4	-	-
	d_e	1.9	1.8	1.7	1.7	-	-	1.8	1.8	1.7	1.6	-	-	1.8	1.7	1.7	1.6	-	-
	d_c	1.6	1.5	1.5	1.4	-	-	1.6	1.5	1.5	1.4	-	-	1.6	1.5	1.5	1.4	-	-
25	**V**	8.1	8.0	7.9	7.3	-	-	7.9	7.5	7.3	7.0	-	-	7.4	7.3	7.0	6.9	-	-
	d_e	2.0	1.9	1.8	1.7	-	-	1.9	1.9	1.8	1.7	-	-	1.9	1.8	1.7	1.7	-	-
	d_c	1.7	1.6	1.5	1.5	-	-	1.6	1.6	1.5	1.5	-	-	1.6	1.6	1.5	1.5	-	-
30	**V**	8.7	8.4	8.1	7.8	-	-	7.9	7.9	7.5	7.5	-	-	7.7	7.6	7.4	7.1	-	-
	d_e	2.1	2.0	1.9	1.8	-	-	2.0	1.9	1.9	1.8	-	-	2.0	1.9	1.8	1.8	-	-
	d_c	1.8	1.7	1.6	1.5	-	-	1.7	1.6	1.6	1.5	-	-	1.7	1.6	1.6	1.5	-	-

V = Velocity, d_e = Entrance Depth, d_c = Critical Depth

ROCK CHUTE DESIGN CHART
Chute Slope = 8:1 (12.5%)
n = 0.04

Q		Side Slope = 2:1						Side Slope 3:1						Side Slope 4:1					
		Bottom Width – Ft.						Bottom Width – Ft.						Bottom Width – Ft.					
		3	4	5	6	8	10	3	4	5	6	8	10	3	4	5	6	8	10
35	**V**	9.2	8.8	8.5	8.3	-	-	8.4	8.2	8.2	8.0	-	-	8.1	8.0	7.7	7.6	-	-
	d_e	2.2	2.1	2.0	1.9	-	-	2.1	2.0	1.9	1.9	-	-	2.1	2.0	1.9	1.8	-	-
	d_c	1.8	1.7	1.7	1.6	-	-	1.8	1.7	1.6	1.6	-	-	1.7	1.7	1.6	1.6	-	-
40	**V**	9.4	9.2	8.9	8.6	8.2	-	8.9	8.5	8.4	8.2	7.9	-	8.4	8.2	8.1	7.7	7.5	-
	d_e	2.3	2.2	2.1	2.0	2.0	-	2.2	2.1	2.0	1.9	1.9	-	2.1	2.0	2.0	1.9	1.9	-
	d_c	1.9	1.8	1.7	1.6	1.5	-	1.8	1.8	1.7	1.6	1.5	-	1.8	1.7	1.7	1.6	1.5	-
45	**V**	9.8	9.6	9.2	9.0	8.5	-	9.2	8.9	8.5	8.5	8.1	-	8.6	8.6	8.4	8.1	7.8	-
	d_e	2.4	2.3	2.2	2.1	1.9	-	2.3	2.2	2.1	2.0	1.9	-	2.2	2.1	2.0	2.0	1.9	-
	d_c	1.9	1.8	1.8	1.7	1.6	-	1.9	1.8	1.7	1.7	1.6	-	1.8	1.8	1.7	1.7	1.6	-
50	**V**	10.0	9.7	9.5	8.9	8.7	-	9.4	9.3	9.0	8.8	8.3	-	8.9	8.7	8.6	8.4	8.0	-
	d_e	2.5	2.3	2.2	2.1	2.0	-	2.3	2.2	2.2	2.1	1.9	-	2.3	2.2	2.1	2.0	1.9	-
	d_c	2.0	1.9	1.8	1.8	1.6	-	1.9	1.8	1.8	1.7	1.6	-	1.9	1.8	1.7	1.7	1.6	-
55	**V**	10.6	10.4	10.1	9.7	9.3	-	9.9	9.6	9.5	9.4	8.8	-	9.3	9.2	9.1	8.9	8.5	-
	d_e	2.6	2.5	2.4	2.3	2.1	-	2.5	2.4	2.3	2.2	2.0	-	2.4	2.3	2.2	2.1	2.0	-
	d_c	2.1	2.0	1.9	1.8	1.7	-	2.0	1.9	1.8	1.8	1.7	-	2.0	1.9	1.8	1.8	1.7	-

V = Velocity, d_e = Entrance Depth, d_c = Critical Depth

ROCK CHUTE DESIGN CHART
Chute Slope = 8:1 (12.5%)
n = 0.04

Q		Side Slope = 2:1						Side Slope 3:1						Side Slope 4:1					
		Bottom Width – Ft.						Bottom Width – Ft.						Bottom Width – Ft.					
		3	4	5	6	8	10	3	4	5	6	8	10	3	4	5	6	8	10
70	V	10.9	10.8	-	-	-	-	10.2	10.1	9.8	9.7	9.3	8.9	9.7	9.6	9.5	9.2	8.9	-
	d_e	2.8	2.6	-	-	-	-	2.6	2.5	2.4	2.3	2.1	2.0	2.5	2.4	2.3	2.2	2.1	-
	d_c	2.2	2.1	-	-	-	-	2.1	2.0	1.9	1.8	1.7	1.7	2.0	2.0	1.9	1.8	1.7	-
80	V	11.4	-	-	-	-	-	10.5	10.5	10.1	10.1	9.8	9.3	10.1	9.9	9.7	9.6	9.4	9.1
	d_e	2.9	-	-	-	-	-	2.7	2.6	2.5	2.4	2.1	2.1	2.6	2.5	2.4	2.3	2.1	2.1
	d_c	2.3	-	-	-	-	-	2.2	2.1	2.0	1.9	1.8	1.7	2.1	2.0	1.9	1.9	1.8	1.7
90	V							10.9	10.8	10.7	10.6	10.0	9.6	10.3	10.3	10.1	10.0	9.7	9.4
	d_e							2.8	2.7	2.6	2.5	2.3	2.2	2.7	2.6	2.5	2.4	2.3	2.2
	d_c							2.2	2.1	2.0	2.0	1.9	1.8	2.2	2.1	2.0	1.9	1.8	1.7
100	V							11.3	11.2	11.0	10.8	10.4	9.9	10.7	10.5	10.4	10.3	10.0	9.8
	d_e							2.9	2.8	2.7	2.6	2.4	2.3	2.8	2.6	2.5	2.4	2.3	2.2
	d_c							2.3	2.2	2.1	2.0	1.9	1.8	2.2	2.1	2.1	2.0	1.9	1.8

V = Velocity, d_e = Entrance Depth, d_c = Critical Depth

REINFORCED CONCRETE DROP BOX SPILLWAY

Design Charts

The R/C drop box spillway design charts in this exhibit are to be used with Standard Drawings OH-N-300 through OH-N-305.

DEFINITIONS:

Q	=	Design capacity of structure in cubic feet per second (cfs).
b	=	dimension of box perpendicular to the toewall in feet (ft.).
w	=	width of notch in feet (ft.).
l	=	weir length; sum of 2b + w in feet (ft.).
h	=	design head for the structure; also the height of toewall above the weir in feet (ft.).
f	=	overfall; distance from the weir to the box floor in feet (ft.).
BW	=	bottom width of entrance channel.
x	=	distance from the side of the box to the toe of the dike(ft.)

DESIGN CRITERIA

Q	=	range from 45 cfs to 400 cfs minimum capacity shall be Q5 for D.A. less than 320 ac. Q10 for D.A. greater than 320 ac.
f	=	overfall from 3.0 ft. to 5.0 ft. weir lengths from 8 to 26 feet with box dimensions of 2x4 to 8x10.
h	=	heads range from 1.5 to 3 feet. The entrance channel bottom width shall be a minimum of 2L-hz where L = weir length; h= head; z = sideslopes.

Selection of box dimensions, head and overfall shall be based on the site topography, economics, and design criteria.

EXAMPLE

Drainage area = 20 acres.
Design depth of waterway 1.5 feet.
Weir elevation 104.0.
Outlet elevation 101.0.
Overfall 3.0 feet.

DESIGN WORKSHEET
REINFORCED CONCRETE
DROP BOX SPILLWAY
ISLAND TYPE STRUCTURES

Owner: D. Brown | Field No. 6

Designer: R. Sams | Date: 10 May 1984

Checker: G. Smith | Date: 10 May 1984

Structure drainage area: 250 | Weir elevation: 104.0

Design depth of waterway: 1.5 | Outlet elevation: 101.0

Overfall: 3.0

Structures with Less than 320 ac. Drainage Area

Q5 35 from OH-ENG-140
Q25 120 from OH-ENG-140

Structures with more than 320 ac. Draiange Area

Q10 --- from OH-ENG-140
Q25 --- from OH-ENG-140

Sizing Structure

Select structure dimensions to fit capacity, outlet channel, overfall, and available head.
EFM notice OH6-2 Sheets _____

Capacity required: Q5 35 Q10
design: 45 _____

Dimensions
box width (w) = 4
depth (b) = 2
overfall (f) = 3.0
weir length (L) = 8
head (h) = 1.5
min. (x) = 1.0

Inlet Channel Dimensions

1. Width shall be BW = 2L-hz L = weir length, h = head, z = sideslopes
BW = 10

2. Slope shall be flat upstream far enough to encompass the entrance to the emergency spillway.

Emergency Spillway EFM Chapt. 11 or 1 = 2.75 $LH^{3/2}$

Q25 120 minus Qbox 45 = Qemergency 75

Crest elevation = 0.5' less than top of toewall 105.0

width = 28 ft., sideslope = 5:1, flow depth = 1.0 ft.

free board = 1.0, top of fill elevation = 107.0

Completing Standard Drawings

A. Select the appropriate standard drawing for the correct overfall 3.0, 3.5, 4.0, 4.5, 5.0.

B. Fill in the appropriate dimensions from the design sheet.

C. Fill in the steel schedule from the appropriate sheets.

Mark 2, 3, and 5-8 bars are on sheets _____ to _____
Mark 1 and 3 bars are on sheet _____

D. Select steel totals and concrete totals from sheets _____ thru _____

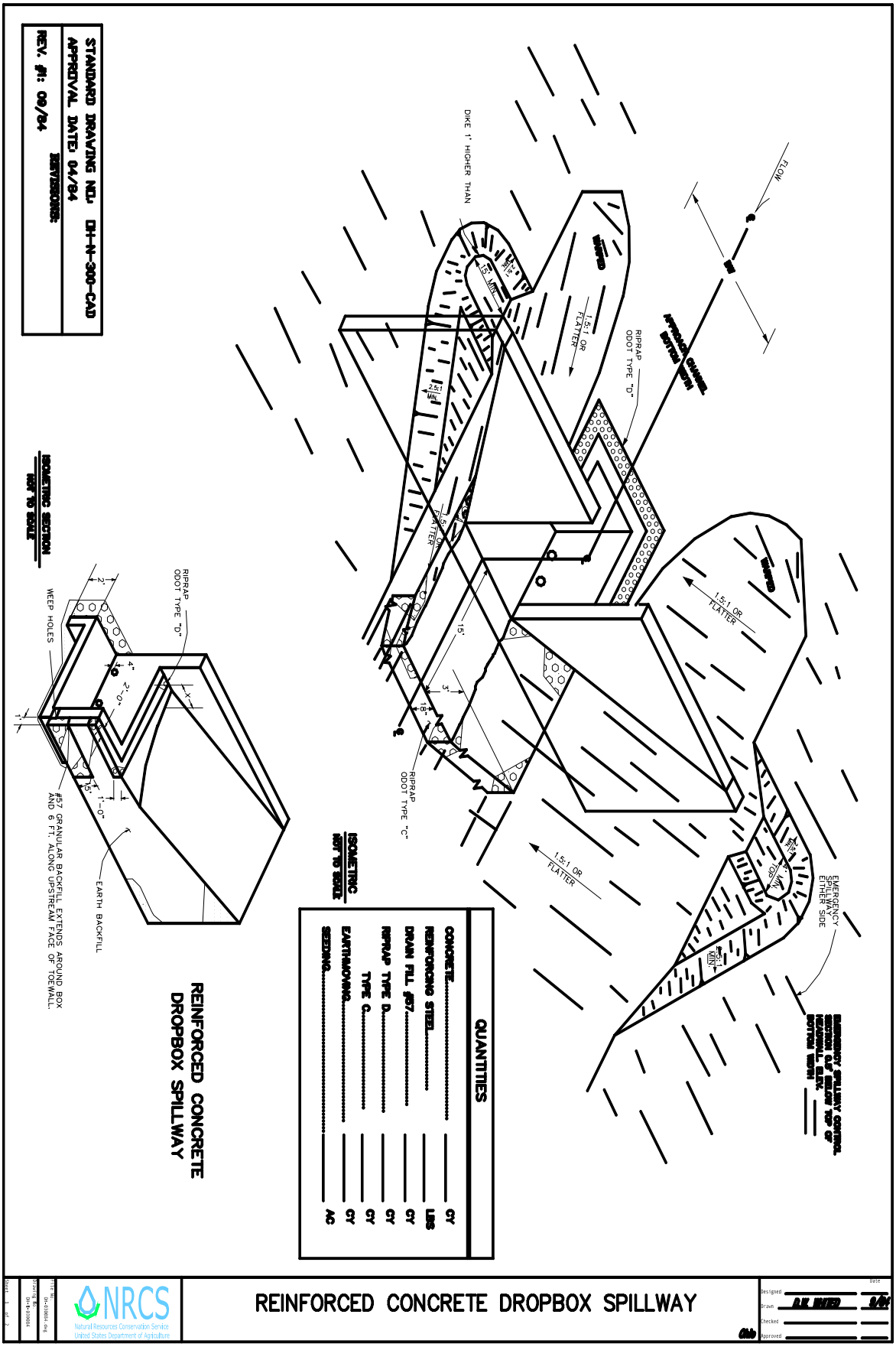
STANDARD DRAWING NO. OH-N-300-CAD
APPROVAL DATE: 04/94
REV. #1: 09/94
REVISIONS:
DIKE 1' HIGHER THAN
FLOW
RIPRAP ODOT TYPE "D"
APPROACH CHANNEL BOTTOM WIDTH
1.5:1 OR FLATTER
15'
3'
1'-0"
RIPRAP ODOT TYPE "C"
EMERGENCY SPILLWAY CONTROL SECTION CLF TRUCK TOP OF HEADWALL ELEV. BOTTOM WIDTH
EMERGENCY SPILLWAY CONTROL SECTION
EITHER SIDE
ISOMETRIC
NOT TO SCALE
QUANTITIES
CONCRETE ..... CY
REINFORCING STEEL ..... LBS
DRAIN FILL #57 ..... CY
RIPRAP TYPE D ..... CY
TYPE C ..... CY
EARTHMOVING ..... CY
SEEDING ..... AC
ISOMETRIC SECTION
NOT TO SCALE
RIPRAP ODOT TYPE "D"
WEEP HOLES
2'
4"
2'-0"
1'-0"
#57 GRANULAR BACKFILL EXTENDS AROUND BOX AND 6 FT. ALONG UPSTREAM FACE OF TOEWALL.
EARTH BACKFILL
REINFORCED CONCRETE DROPBOX SPILLWAY
NRCS
Natural Resources Conservation Service
United States Department of Agriculture
REINFORCED CONCRETE DROPBOX SPILLWAY
Designed
Drawn
Checked
Approved
Date

Reinforced Concrete
Drop Box Spillway

Overfall Height **f = 3.0, 3.5, 4.0, 4.5, 5.0**
Notch Depth **h = 1.5, 2.0, 2.5, 3.0**

Box Depth (b)	Box Width (w)	Weir Length (l)	Minimum "X" l/	Capacity cfs h=1.5	h=2.0	h=2.5	h=3.0
2	4	8	1.0	45	70	100	130
2	6	10	1.0	55	85	120	160
4	4	12	2.0	65	100	140	190
4	6	14	2.0	75	115	170	210
4	8	16	1.5	85	135	190	260
4	10	18	2.0	95	150	210	285
6	4	16	2.5	85	135	190	245
6	6	18	3.0	95	150	210	280
6	8	20	3.0	105	165	235	310
6	10	22	2.5	115	180	255	345
8	10	26	4.0	130	205	295	400

1/ "X" is the distance from the side of the box to the toe of the dike.

Capacity from Agriculture Handbook 301

$$Q = \frac{(C_1)(C_2)(C\sqrt{2g})(h^{3/2})(L)}{1.1+.01f}$$

C = constant = .4275
g = gravity 32.2 ft/sec^2
L = weir length
C_1 = modifier due to head h/w Agriculture Handbook, page 8.
C_2 = modifier due to box inlet shape b/w Agriculture Handbook, page 8.
f = overfall
h = head

Simplified

$$Q = \frac{C_1 C_2 3.43 h^{3/2} L}{1.1+.01f}$$

for b-2, w=4, h=3, f=4.0

h/w = 3/4 = .75 find $C_1 = 1$
b/w = 2/4 = 0.5 find $C_2 = 1.04$

$$Q = \frac{(1)(1.04)(3.43)(3)^{3/2}(8)}{1.14} = 130.1 \text{ use } 130$$

REINFORCED CONCRETE DROP BOX SPILLLWAY
STEEL SCHEDULE

Overfall f = 3.0
All bars are #4 = ½ dia.

b=2 w=4

MARK	TYPE	QUAN.	A	B
1	1	-	-	-
2	3	10	11-6	2-0
3	3	10	2-0	3-0
4	1	-	-	-
5	3	6	1-6	2-0
6	3	6	2-0	3-2
7	3	6	3-2	3-0
8	1	4	14-6	-

b=2 w=6

MARK	TYPE	QUAN.	A	B
1	1	-	-	-
2	3	10	11-6	2-0
3	3	10	2-0	4-0
4	1	-	-	-
5	3	9	1-6	2-0
6	3	9	2-0	3-2
7	3	6	3-2	4-0
8	1	4	15-6	-

b=4 w=4

MARK	TYPE	QUAN.	A	B
1	1	-	-	-
2	3	10	11-6	3-0
3	3	10	3-0	3-0
4	1	-	-	-
5	3	6	1-6	3-0
6	3	6	3-0	3-8
7	3	12	3-2	3-0
8	1	4	14-6	-

b=4 w=6

MARK	TYPE	QUAN.	A	B
1	1	-	-	-
2	3	10	11-6	3-0
3	3	10	3-0	4-0
4	1	-	-	-
5	3	9	1-6	3-0
6	3	9	3-0	3-2
7	3	12	3-2	4-0
8	1	4	15-6	-

b=4 w=8

MARK	TYPE	QUAN.	A	B
1	1	-	-	-
2	3	10	11-6	3-0
3	3	10	3-0	5-0
4	1	-	-	-
5	3	12	1-6	3-0
6	3	12	3-0	3-2
7	3	12	3-2	5-0
8	1	4	16-6	-

b=4 w=10

MARK	TYPE	QUAN.	A	B
1	1	-	-	-
2	3	10	11-6	3-0
3	3	10	3-0	6-0
4	1	-	-	-
5	3	15	1-6	3-0
6	3	15	3-0	3-2
7	3	12	3-2	6-0
8	1	4	17-6	-

b=6 w=4

MARK	TYPE	QUAN.	A	B
1	1	-	-	-
2	3	10	11-6	4-0
3	3	10	4-0	3-0
4	1	-	-	-
5	3	6	1-6	4-0
6	3	6	4-0	3-2
7	3	18	3-2	3-0
8	1	4	14-6	-

b=6 w=6

MARK	TYPE	QUAN.	A	B
1	1	-	-	-
2	3	10	11-6	4-0
3	3	10	4-0	4-0
4	1	-	-	-
5	3	9	1-6	4-0
6	3	9	4-0	3-2
7	3	18	3-2	5-0
8	1	4	16-6	-

b=6 w=8

MARK	TYPE	QUAN.	A	B
1	1	-	-	-
2	3	10	11-6	4-0
3	3	10	4-0	5-0
4	1	-	-	-
5	3	12	1-6	4-0
6	3	12	4-0	3-2
7	3	18	3-2	5-0
8	1	4	16-6	-

b=6 w=10

MARK	TYPE	QUAN.	A	B
1	1	-	-	-
2	3	10	11-6	4-0
3	3	10	4-0	6-0
4	1	-	-	-
5	3	15	1-6	4-0
6	3	15	4-0	3-2
7	3	18	3-2	6-0
8	1	4	17-6	-

b=8 w=10

MARK	TYPE	QUAN.	A	B
1	1	-	-	-
2	3	10	11-6	5-0
3	3	10	5-0	6-0
4	1	-	-	-
5	3	15	1-6	5-0
6	3	15	5-0	3-2
7	3	24	3-2	6-0
8	1	4	17-6	-

Overfall f = 3.5
All bars are #4 = ½ dia.

b=2 w=4

MARK	TYPE	QUAN.	A	B
1	1	-	-	-
2	3	12	11-6	2-0
3	3	12	2-0	3-0
4	1	-	-	-
5	3	6	1-6	2-0
6	3	6	2-0	3-8
7	3	6	3-8	3-0
8	1	4	14-6	-

b=2 w=6

MARK	TYPE	QUAN.	A	B
1	1	-	-	-
2	3	12	11-6	2-0
3	3	12	2-0	4-0
4	1	-	-	-
5	3	9	1-6	2-0
6	3	9	2-0	3-8
7	3	6	3-8	4-0
8	1	4	15-6	-

b=4 w=4

MARK	TYPE	QUAN.	A	B
1	1	-	-	-
2	3	12	11-6	3-0
3	3	12	3-0	3-0
4	1	-	-	-
5	3	6	1-6	3-0
6	3	6	3-0	3-8
7	3	12	3-8	3-0
8	1	4	14-6	-

b=4 w=6

MARK	TYPE	QUAN.	A	B
1	1	-	-	-
2	3	12	11-6	3-0
3	3	12	3-0	4-0
4	1	-	-	-
5	3	9	1-6	3-0
6	3	9	3-0	3-8
7	3	12	3-8	4-0
8	1	4	15-6	-

b=4 w=8

MARK	TYPE	QUAN.	A	B
1	1	-	-	-
2	3	12	11-6	3-0
3	3	12	3-0	5-0
4	1	-	-	-
5	3	12	1-6	3-0
6	3	12	3-0	3-8
7	3	12	3-8	5-0
8	1	4	16-6	-

b=4 w=10

MARK	TYPE	QUAN.	A	B
1	1	-	-	-
2	3	12	11-6	3-0
3	3	12	3-0	6-0
4	1	-	-	-
5	3	15	1-6	3-0
6	3	15	3-0	3-8
7	3	12	3-8	6-0
8	1	4	17-6	--

b=6 w=4

MARK	TYPE	QUAN.	A	B
1	1	-	-	-
2	3	12	11-6	4-0
3	3	12	4-0	3-0
4	1	-	-	-
5	3	6	1-6	4-0
6	3	6	4-0	3-8
7	3	18	3-8	3-0
8	1	4	14-6	-

b=6 w=6

MARK	TYPE	QUAN.	A	B
1	1	-	11-6	-
2	3	12	11-6	4-0
3	3	12	4-0	4-0
4	1	-	-	-
5	3	9	1-6	4-0
6	3	9	4-0	3-8
7	3	18	3-8	4-0
8	1	4	15-6	-

b=6 w=8

MARK	TYPE	QUAN.	A	B
1	1	-	-	-
2	3	12	11-6	4-0
3	3	12	4-0	5-0
4	1	-	-	-
5	3	12	1-6	4-0
6	3	12	4-0	3-8
7	3	18	3-8	5-0
8	1	4	16-6	-

b=6 w=10

MARK	TYPE	QUAN.	A	B
1	1	-	-	-
2	3	12	11-6	4-0
3	3	12	4-0	6-0
4	1	-	-	-
5	3	15	1-6	4-0
6	3	15	4-0	3-8
7	3	18	3-8	6-0
8	1	4	17-6	-

b=8 w=10

MARK	TYPE	QUAN.	A	B
1	1	-	-	-
2	3	12	11-6	5-0
3	3	12	5-0	6-0
4	1	-	-	-
5	3	15	1-6	5-0
6	3	15	5-0	3-8
7	3	24	3-8	6-0
8	1	4	17-6	-

Overfall f = 4.0
All bars are #4 = ½ dia.

b=2 w=4

MARK	TYPE	QUAN.	A	B
1	1	-	-	-
2	3	14	11-6	2-0
3	3	14	2-0	3-0
4	1	-	-	-
5	3	6	1-6	2-0
6	3	6	2-0	4-2
7	3	6	4-2	3-0
8	1	4	14-6	-

b=2 w=6

MARK	TYPE	QUAN.	A	B
1	1	-	-	-
2	3	14	11-6	2-0
3	3	14	2-0	4-0
4	1	-	-	-
5	3	9	1-6	2-0
6	3	9	2-0	4-2
7	3	6	4-2	4-0
8	1	4	15-6	-

b=4 w=4

MARK	TYPE	QUAN.	A	B
1	1	-	-	-
2	3	14	11-6	3-0
3	3	14	3-0	3-0
4	1	-	-	-
5	3	6	1-6	3-0
6	3	6	3-0	4-2
7	3	12	4-2	3-0
8	1	4	14-6	-

b=4 w=6

MARK	TYPE	QUAN.	A	B
1	1	-	-	-
2	3	14	11-6	3-0
3	3	14	3-0	4-0
4	1	-	-	-
5	3	9	1-6	3-0
6	3	9	3-0	4-2
7	3	18	4-2	4-0
8	1	4	15-6	-

b=4 w=8

MARK	TYPE	QUAN.	A	B
1	1	-	-	-
2	3	14	11-6	3-0
3	3	14	3-0	5-0
4	1	-	-	-
5	3	12	1-6	3-0
6	3	12	3-0	4-2
7	3	12	4-2	5-0
8	1	4	15-6	-

b=4 w=10

MARK	TYPE	QUAN.	A	B
1	1	-	-	-
2	3	14	11-6	3-0
3	3	14	3-0	6-0
4	1	-	-	-
5	3	15	1-6	3-0
6	3	15	3-0	4-2
7	3	12	4-2	6-0
8	1	4	17-6	--

b=6 w=4

MARK	TYPE	QUAN.	A	B
1	1	-	-	-
2	3	14	11-6	4-0
3	3	14	4-0	3-0
4	1	-	-	-
5	3	6	1-6	4-0
6	3	6	4-0	4-2
7	3	18	4-2	3-0
8	1	4	14-6	-

b=6 w=6

MARK	TYPE	QUAN.	A	B
1	1	-	-	-
2	3	14	11-6	4-0
3	3	14	4-0	4-0
4	1	-	-	-
5	3	9	1-6	4-0
6	3	9	4-0	4-2
7	3	18	4-2	4-0
8	1	4	15-6	-

b=6 w=8

MARK	TYPE	QUAN.	A	B
1	1	-	-	-
2	3	14	11-6	4-0
3	3	14	4-0	5-0
4	1	-	-	-
5	3	12	1-6	4-0
6	3	12	4-0	4-2
7	3	18	4-2	5-0
8	1	4	16-6	-

b=6 w=10

MARK	TYPE	QUAN.	A	B
1	1	-	-	-
2	3	14	11-6	4-0
3	3	14	4-0	6-0
4	1	-	-	-
5	3	15	1-6	4-0
6	3	15	4-0	4-2
7	3	18	4-2	6-0
8	1	4	17-6	-

b=8 w=10

MARK	TYPE	QUAN.	A	B
1	1	-	-	-
2	3	14	11-6	5-0
3	3	14	5-0	6-0
4	1	-	-	-
5	3	15	1-6	5-0
6	3	15	5-0	4-2
7	3	24	4-2	6-0
8	1	4	17-6	-

Overfall f = 4.5
All bars are #4 = ½ dia.

b=2 w=4

MARK	TYPE	QUAN.	A	B
1	1	-	-	-
2	3	16	11-6	2-0
3	3	16	2-0	3-0
4	1	-	-	-
5	3	6	1-6	2-0
6	3	6	2-0	4-8
7	3	6	4-8	3-0
8	1	4	14-6	-

b=2 w=6

MARK	TYPE	QUAN.	A	B
1	1	-	-	-
2	3	16	11-6	2-0
3	3	16	2-0	4-0
4	1	-	-	-
5	3	9	1-6	2-0
6	3	9	2-0	4-8
7	3	6	4-8	4-0
8	1	4	15-6	-

b=4 w=4

MARK	TYPE	QUAN.	A	B
1	1	-	-	-
2	3	16	11-6	3-0
3	3	16	3-0	3-0
4	1	-	-	-
5	3	6	1-6	3-0
6	3	6	3-0	4-8
7	3	12	4-8	3-0
8	1	4	14-6	-

b=4 w=6

MARK	TYPE	QUAN.	A	B
1	1	-	-	-
2	3	16	11-6	3-0
3	3	16	3-0	4-0
4	1	-	-	-
5	3	9	1-6	3-0
6	3	9	3-0	4-8
7	3	12	4-8	4-0
8	1	4	15-6	-

b=4 w=8

MARK	TYPE	QUAN.	A	B
1	1	-	-	-
2	3	16	11-6	3-0
3	3	16	3-0	5-0
4	1	-	-	-
5	3	12	1-6	3-0
6	3	12	3-0	4-8
7	3	12	4-8	5-0
8	1	4	15-6	-

b=4 w=10

MARK	TYPE	QUAN.	A	B
1	1	-	-	-
2	3	16	11-6	3-0
3	3	16	3-0	6-0
4	1	-	-	-
5	3	15	1-6	3-0
6	3	15	3-0	4-8
7	3	12	4-8	6-8
8	1	4	17-6	-

b=6 w=4

MARK	TYPE	QUAN.	A	B
1	1	-	-	-
2	3	16	11-6	4-0
3	3	16	4-0	3-0
4	1	-	-	-
5	3	6	1-6	4-0
6	3	6	4-0	4-8
7	3	18	4-8	3-0
8	1	4	17-6	-

b=6 w=6

MARK	TYPE	QUAN.	A	B
1	1	-	-	-
2	3	16	11-6	4-0
3	3	16	4-0	4-0
4	1	-	-	-
5	3	9	1-6	4-0
6	3	9	4-0	4-8
7	3	6	4-8	4-0
8	1	4	15-6	-

b=6 w=8

MARK	TYPE	QUAN.	A	B
1	1	-	-	-
2	3	16	11-6	4-0
3	3	16	4-0	5-0
4	1	-	-	-
5	3	12	1-6	4-0
6	3	12	4-0	4-8
7	3	18	4-8	5-0
8	1	4	16-6	-

b=6 w=10

MARK	TYPE	QUAN.	A	B
1	1	-	-	-
2	3	16	11-6	4-0
3	3	16	4-0	6-0
4	1	-	-	-
5	3	15	1-6	4-0
6	3	15	4-0	4-8
7	3	18	4-8	6-0
8	1	4	17-6	-

b=8 w=10

MARK	TYPE	QUAN.	A	B
1	1	-	-	-
2	3	16	11-6	5-0
3	3	16	5-0	6-0
4	1	-	-	-
5	3	15	1-6	5-0
6	3	15	5-0	4-8
7	3	24	4-8	6-0
8	1	4	17-6	-

Overfall f = 5.0
All bars are #4 = ½ dia.

b=2 w=4

MARK	TYPE	QUAN.	A	B
1	1	-	-	-
2	3	18	11-6	2-0
3	3	18	2-0	3-0
4	1	-	-	-
5	3	6	1-6	2-0
6	3	6	2-0	5-2
7	3	6	5-2	3-0
8	1	4	14-6	-

b=2 w=6

MARK	TYPE	QUAN.	A	B
1	1	-	-	-
2	3	18	11-6	2-0
3	3	18	2-0	4-0
4	1	-	-	-
5	3	9	1-6	2-0
6	3	9	2-0	5-2
7	3	6	5-2	4-0
8	1	4	15-6	-

b=4 w=4

MARK	TYPE	QUAN.	A	B
1	1	-	-	-
2	3	18	11-6	3-0
3	3	18	3-0	3-0
4	1	-	-	-
5	3	6	1-6	3-0
6	3	6	3-0	5-2
7	3	12	5-2	3-0
8	1	4	14-6	-

b=4 w=6

MARK	TYPE	QUAN.	A	B
1	1	-	-	-
2	3	18	11-6	3-0
3	3	18	3-0	4-0
4	1	-	-	-
5	3	9	1-6	3-0
6	3	9	3-0	5-2
7	3	12	5-2	4-0
8	1	4	15-6	-

b=4 w=8

MARK	TYPE	QUAN.	A	B
1	1	-	-	-
2	3	18	11-6	3-0
3	3	18	3-0	5-0
4	1	-	-	-
5	3	12	1-6	3-0
6	3	12	3-0	5-2
7	3	12	5-2	5-0
8	1	4	15-6	-

b=4 w=10

MARK	TYPE	QUAN.	A	B
1	1	-	-	-
2	3	18	11-6	3-0
3	3	18	3-0	6-0
4	1	-	-	-
5	3	15	1-6	3-0
6	3	15	3-0	5-2
7	3	12	5-2	6-0
8	1	4	17-6	-

b=6 w=4

MARK	TYPE	QUAN.	A	B
1	1	-	-	-
2	3	18	11-6	4-0
3	3	18	4-0	3-0
4	1	-	-	-
5	3	6	1-6	4-0
6	3	6	4-0	5-2
7	3	18	5-2	3-0
8	1	4	14-6	-

b=6 w=6

MARK	TYPE	QUAN.	A	B
1	1	-	-	-
2	3	18	11-6	4-0
3	3	18	4-0	4-0
4	1	-	-	-
5	3	9	1-6	4-0
6	3	9	4-0	5-2
7	3	18	5-2	4-0
8	1	4	15-6	-

b=6 w=8

MARK	TYPE	QUAN.	A	B
1	1	-	-	-
2	3	18	11-6	4-0
3	3	18	4-0	5-0
4	1	-	-	-
5	3	12	1-6	4-0
6	3	12	4-0	5-2
7	3	18	5-2	5-0
8	1	4	16-6	-

b=6 w=10

MARK	TYPE	QUAN.	A	B
1	1	-	-	-
2	3	18	11-6	4-0
3	3	18	4-0	6-0
4	1	-	-	-
5	3	15	1-6	4-0
6	3	15	4-0	5-2
7	3	18	5-2	6-0
8	1	4	17-6	-

b=8 w=10

MARK	TYPE	QUAN.	A	B
1	1	-	-	-
2	3	18	11-6	5-0
3	3	18	5-0	6-0
4	1	-	-	-
5	3	15	1-6	5-0
6	3	15	5-0	5-2
7	3	24	5-2	6-0
8	1	4	17-6	-

MARK	TYPE	QUAN.	A	B	MARK	TYPE	QUAN.	A	B
OVERFALL f=3.0 h=1.5					**OVERFALL f=3.5 h=1.5**				
1	1	4	11-6		1	1	4	11-6	
4	1	36	6-0		4	1	36	6-6	
		h=2.0					h=2.0		
1	1	6	11=6		1	1	6	11-6	
4	1	36	6-6		4	1	36	7-0	
		h=2.5					h=2.5		
1	1	8	11-6		1	1	8	11-6	
4	3	36	7-0		4	1	36	7-6	
		h=3.0					h=3.0		
1	1	10	11-6		1	1	8	11-6	
4	1	36	7-6		4	1	36	8-0	
OVERFALL f=4.0 h=1.5					**OVERFALL f = 4.5 h=1.5**				
1	1	4	11-6		1	1	4	11-6	
4	1	36	7-0		4	1	36	7-6	
		h=2.0					h=2.0		
1	1	6	11-6		1	1	6	11-6	
4	1	36	7-6		4	1	36	8-0	
		h=2.5					h=2.5		
1	1	6	11-6		1	1	6	11-6	
4	1	36	8-0		4	1	36	8-6	
		h=3.0					h=3.0		
1	1	8	11-6		1	1	8	11-6	
4	1	36	8-6		4	1	36	9-0	
OVERFALL f=5.0 h=1.5									
1	1	6	11-6						
4	1	36	8-0						
		h=2.0							
1	1	6	11-6						
4	1	36	8-6						
		h=2.5							
1	1	8	11-6						
4	1	36	9-0						
		h=3.0							
1	1	10	11-6						
4	1	36	9-6						

REINFORCED CONCRETE
DROPBOX SPILLWAY
Steel and Concrete Quantities

Overfall f – 3.0

b	w	h = 1.5			h = 2.0			h = 2.5			h = 3.0		
		Steel	Concrete		Steel	Concrete		Steel	Concrete		Steel	Concrete	
		ft.-in.	lbs.	c.y.	ft.-in.	lbs.	c.y.	ft.-in.	lbs.	c.y.	ft.-in.	lbs.	c.y.
2	4	614-0	410	5.1	655.0	440	5.4	696.0	460	5.7	717-0	480	6.0
2	6	640-0	430	5.5	681.0	450	5.8	722.0	480	6.1	763-0	510	6.4
4	4	663-0	440	5.6	704.0	470	5.9	745.0	500	6.2	786-0	530	6.5
4	6	721-0	480	6.1	762.0	500	6.4	803.0	540	6.7	844-0	560	7.0
4	8	779-0	520	6.6	820.0	550	6.9	861.0	580	7.2	902-0	600	7.5
4	10	837-0	550	7.1	878.0	590	7.4	919.0	610	7.7	960-0	640	8.0
6	4	732-0	490	6.2	773.0	520	6.5	814.0	540	6.8	855-0	570	7.1
6	6	802-0	540	6.8	843.0	560	7.1	884.0	590	7.4	925-0	620	7.7
6	8	872-0	580	7.3	903.0	610	7.6	954.0	640	7.9	995-0	660	8.3
6	10	942-0	630	7.9	983.0	660	8.2	1024.0	680	8.5	1065-0	710	8.8
8	10	1047-0	700	8.8	1088.0	730	9.1	1129.0	750	9.4	1170-0	780	9.7

Overfall f = 3.5

b	w	h = 1.5			h = 2.0			h = 2.5			h = 3.0		
		Steel	Concrete		Steel	Concrete		Steel	Concrete		Steel	Concrete	
		ft.-in.	lbs.	c.y.	ft.-in.	lbs.	c.y.	ft.-in.	lbs.	c.y.	ft.-in.	lbs.	c.y.
2	4	655-0	440	5.5	696-0	460	5.8	737-0	490	6.1	755-0	530	6.4
2	6	704-6	470	5.9	745-6	500	6.2	786-6	530	6.5	804-6	560	6.8
4	4	731-0	490	6.1	772-0	515	6.4	813-0	540	6.7	831-0	580	7.0
4	6	792-6	530	6.6	833-6	560	6.9	874-6	580	7.2	892-6	630	7.5
4	8	854-0	570	7.1	895-0	600	7.4	936-0	630	7.7	954-0	670	8.0
4	10	915-6	610	7.6	956-6	640	7.9	997-6	670	8.2	1015-6	710	8.5
6	4	807-0	540	6.7	848-0	570	7.0	889-0	590	7.3	907-0	640	7.6
6	6	880-6	590	7.3	921-6	620	7.6	962-6	640	7.9	980-6	690	8.2
6	8	954-0	640	7.9	995-0	660	8.2	1036-0	690	8.5	1054-0	740	8.8
6	10	1027-6	690	8.5	1068-6	710	8.8	1109-6	740	9.1	1127-6	790	9.4
8	10	1139-0	760	9.4	1180-0	790	9.7	1221-0	820	10.0	1239-6	830	10.3

Overfall f = 4.0

b	w	h = 1.5			h = 2.0			h = 2.5			h = 3.0		
		Steel		Concrete	Steel		Concrete	Steel		Concrete	Steel		Concrete
		ft.-in.	lbs.	c.y.	ft.-in.	lbs.	c.y.	ft.-in.	lbs.	c.y.	ft.-in.	lbs.	c.y.
2	4	716-0	480	5.9	757-0	510	6.2	775-0	520	6.5	816-0	570	6.8
2	6	769-0	510	6.3	810-0	540	6.6	828-0	550	6.9	869-0	610	7.2
4	4	799-0	530	6.6	840-0	560	6.9	858-0	570	7.2	899-0	630	7.5
4	6	864-0	580	7.1	905-0	600	7.4	923-0	620	7.7	964-0	670	8.0
4	8	929-0	620	7.6	970-0	650	7.9	988-0	660	8.2	1029-0	720	8.5
4	10	994-0	660	8.2	1035-0	690	8.4	1053-0	700	8.8	1094-0	760	9.1
6	4	882-0	590	7.2	923-0	620	7.5	941-0	630	7.8	982-0	690	8.1
6	6	959-0	640	7.9	1000-0	670	8.2	1018-0	680	8.5	1059-0	740	8.8
6	8	1036-0	690	8.5	1077-0	720	8.8	1095-0	730	9.1	1136-0	790	9.4
6	10	1113-0	740	9.1	1154-0	770	9.4	1172-0	780	9.7	1213-0	850	10.0
8	10	1232-0	820	10.1	1273-0	850	10.4	1291-0	860	10.7	1332-0	890	11.0

Overfall f = 4.5

b	w	h = 1.5			h = 2.0			h = 2.5			h = 3.0		
		Steel		Concrete	Steel		Concrete	Steel		Concrete	Steel		Concrete
		ft.-in.	lbs.	c.y.	ft.-in.	lbs.	c.y.	ft.-in.	lbs.	c.y.	ft.-in.	lbs.	c.y.
2	4	777-0	520	6.3	818-0	550	6.6	836-0	560	6.9	877-0	590	7.2
2	6	833-6	560	6.8	874-0	580	7.0	892-6	600	7.4	933-6	620	7.7
4	4	867-0	580	7.0	908-0	610	7.3	926-0	620	7.6	967-0	650	7.9
4	6	935-6	620	7.6	976-6	650	7.9	994-6	660	8.2	1035-6	700	8.5
4	8	1003-0	670	8.1	1044-0	700	8.4	1062-0	710	8.7	1103-0	740	9.0
4	10	1072-6	720	8.7	113-6	740	9.0	1131-6	760	9.3	1172-6	780	9.6
6	4	957-0	640	7.6	998-0	670	8.0	1016-0	680	8.2	1057-0	710	8.6
6	6	1031-6	690	8.4	1072-6	720	8.7	1090-6	730	9.0	1131-6	760	9.3
6	8	1118-0	750	9.0	1159-0	770	9.3	1177-0	790	9.6	1218-0	810	9.9
6	10	1198-6	800	9.7	1239-6	830	10.0	1257-6	840	10.3	1298-6	870	10.6
8	10	1324-6	880	10.7	1365-6	910	11.0	1383-6	920	11.3	1424-6	950	11.6

Overfall f = 5.0

b	w	h = 1.5			h = 2.0			h = 2.5			h = 3.0		
		Steel	Concrete		Steel	Concrete		Steel	Concrete		Steel	Concrete	
		ft.-in.	lbs.	c.y.	ft.-in.	lbs.	c.y.	ft.-in.	lbs.	c.y.	ft.-in.	lbs.	c.y.
2	4	861-0	580	6.7	879-0	590	7.0	920-0	610	7.3	961-0	640	7.6
2	6	921-0	620	7.2	939-0	630	7.5	980-0	650	7.8	1021-0	680	8.1
4	4	958-0	640	7.5	976-0	650	7.8	1017-0	680	8.1	1058-0	710	8.4
4	6	1030-0	670	8.1	1048-0	700	8.4	1089-0	730	8.7	1130-0	750	9.0
4	8	1101-0	740	8.6	1119-0	750	8.9	1160-0	770	9.2	1201-0	800	9.5
4	10	1174-0	780	9.3	1192-0	800	9.6	1233-0	820	9.9	1274-0	850	10.2
6	4	1055-0	700	8.3	1073-0	720	8.6	1114-0	740	8.9	1155-0	770	9.2
6	6	1133-0	760	8.9	1151-0	770	9.2	1192-0	800	9.5	1233-0	820	9.8
6	8	1223-0	820	9.6	1241-0	830	9.9	1282-0	860	10.2	1323-0	880	10.5
6	10	1307-0	870	10.3	1325-0	890	10.6	1366-0	910	10.9	1407-0	940	11.2
8	10	1440-0	960	11.3	1458-0	970	11.6	1499-0	1000	11.9	1540-0	1030	12.2

DESIGN WORKSHEET
REINFORCED CONCRETE
DROP BOX SPILLWAY
ISLAND TYPE STRUCTURES

Owner _____ Field No. _____

Designer _____ Date: _____

Checker _____ Date: _____

Structure drainage area: _____ Weir elevation: _____

Design depth of waterway: _____ Outlet elevation: _____

Overfall: _____

Structures with Less than 320 ac. Drainage Area

Q5 _____ from OH-ENG-140
Q25 _____ from OH-ENG-140

Structures with more than 320 ac. Draiange Area

Q10 _____ from OH-ENG-140
Q25 _____ from OH-ENG-140

Sizing Structure

Select structure dimensions to fit capacity, outlet channel, overfall, and available head.
EFM notice _____ Sheets _____

Capacity required: _____ _____
design _____ _____

Dimensions:

box width (w) = _____
depth (b) = _____
overfall (f) = _____
weir length (L) = _____
head (h) = _____
min. (x) = _____

Inlet Channel Dimensions

1. Width shall be BW = 2L-hz L = weir length, h = head, z = sideslopes
BW = _____

2. Slope shall be flat upstream far enough to encompass the entrance to the emergency spillway.

Emergency Spillway EFM Chapt. 11 or 1 = 2.75 $LH^{3/2}$

Q25 _____ minus Qbox _____ = Qemergency _____

Crest elevation = 0.5' less than top of toewall _____

width = _____ ft., sideslope = _____, flow depth = _____ ft.

free board = _____, top of fill elevation = _____

CHART FOR DETERMINING INLET PROPORTIONS
AND REQUIRED HEAD OVER INLET

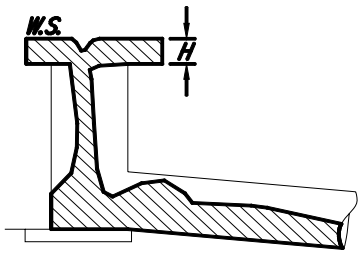

Weir Control at Entrance

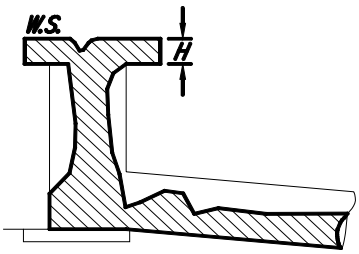

Orifice Control at Entrance Conduit

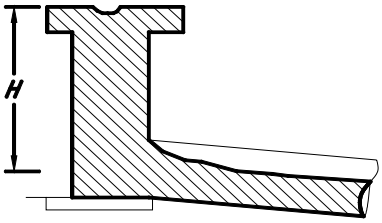

Orifice Control at Entrance of
Barrel or Short Tube Control

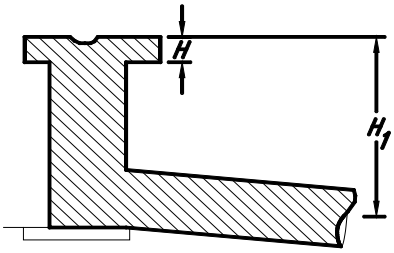

Full Pipe Flow

Figure 1
DROP INLETS
(WEIR FLOW CONDITION)

Note: This table is based on a circular riser with a tangent splitter wall (Exhibit OH 605, sheet 5 of 8). The weir length (L) is reduced to 2.57D. If risers are used that can generate full weir flow, use L = 3.14D in the weir formula.

Riser Diameter Inches	Head in Feet												
	0.4	**0.5**	**0.6**	**0.7**	**0.8**	**0.9**	**1.0**	**1.1**	**1.2**	**1.3**	**1.4**	**1.5**	**1.6**
15	2.7	3.8	4.9	6.3	**ORIFICE**								
18	3.2	4.5	5.9	7.6	9.3	10.9	**FLOW**						
21	3.8	5.3	7.0	8.8	10.7	12.8	15.0	**CONDITIONS**					
24	4.3	6.0	7.9	10.1	12.3	14.6	17.1	19.7	22.4	**CONTROL**			
30	5.4	7.5	9.8	12.6	15.4	18.2	21.4	24.6	28.0	31.7	35.5		
36	6.4	9.0	11.8	15.1	18.5	21.8	25.7	29.5	33.6	38.0	42.6	47.2	51.9
42	7.5	10.5	13.8	17.7	21.6	25.5	30.0	34.5	39.3	44.4	49.8	55.1	60.5
48	8.6	12.0	15.7	20.2	24.6	29.1	34.2	39.4	44.8	50.7	56.8	63.0	69.1
54	9.6	13.5	17.7	22.7	27.7	32.8	38.5	44.3	50.5	57.0	64.0	70.9	77.8
60	10.7	15.0	19.7	25.2	30.8	36.4	42.8	49.2	56.1	63.3	71.0	78.7	86.4

Riser Diameter Inches	Head in Feet								
	1.7	**1.8**	**1.9**	**2.0**	**2.1**	**2.2**	**2.3**	**2.4**	**2.5**
42	66.5	72.5	**ORIFICE FLOW**						
48	76.0	82.8	89.7	96.9	104.1	**CONDITIONS CONTROL**			
54	85.5	93.2	100.9	109.0	117.1	125.6	134.5	143.3	
60	95.0	103.6	112.1	121.1	130.1	139.5	149.3	159.2	169.0

NOTES: (1) The discharge capacities shown in this table are based on the formula: $\mathbf{Q_2 = C_2\ L\ H_2^{\ 3/2}}$

Q2 = discharge capacity of weir, in c.f.s.

C2 = weir coefficient = 3.33.

L = length of weir crest, in feet (for circular riser with headwall, L = 2.57 times diameter of riser).

H2 = distance from crest of riser to water surface in reservoir, in feet.

(2) The diameter of the riser should be at least 11/4 times the diameter of barrel.

(3) Use this table in conjunction with orifice flow and full pipe flow conditions to determine capacity of the drop inlet.

Figure 2

HEAD DISCHARGE TABLE FOR CORRUGATED METAL PIPE
DROP INLETS
(Orifice Control Conditions at Crest of Riser or Entrance to Barrel)

Diameter Inches	Head in Feet																
	1.0	**1.5**	**2.0**	**2.5**	**3.0**	**3.5**	**4.0**	**4.5**	**5.0**	**5.5**	**6.0**	**6.5**	**7.0**	**7.5**	**8.0**	**8.5**	**9.0**
12	4.1	5.0	5.8	6.3	7.1	7.7	8.2	8.7	9.1	9.6	10.0	10.4	10.8	11.2	11.6	11.9	12.3
15	6.7	8.2	9.5	10.6	11.6	12.6	13.4	14.3	15.0	15.8	16.5	17.1	17.8	18.4	19.0	19.6	20.2
18	10.1	12.3	14.3	16.0	17.5	18.9	20.2	21.4	22.5	23.6	24.7	25.7	26.7	27.6	28.5	29.4	30.2
21	13.8	17.0	19.6	21.9	24.0	25.9	27.7	29.4	31.0	32.5	33.9	35.3	36.6	37.9	39.2	40.4	41.6
24		22.5	26.1	29.2	32.0	34.5	36.8	39.0	41.1	43.1	45.0	46.9	48.6	50.3	52.0	53.6	55.1
30		35.2	40.8	45.4	49.9	53.8	57.5	61.0	64.3	67.4	70.4	73.3	76.1	78.7	81.3	83.8	86.2
36			58.7	65.7	71.9	77.8	82.9	87.9	92.7	97.2	101.5	105.7	109.7	113.5	117.2	120.8	124.4
42			79.8	88.2	97.7	105.5	112.6	119.5	125.9	132.1	137.9	143.6	149.0	154.2	159.3	164.2	169.0
48				115.0	125.5	136.0	145.2	154.0	162.3	170.2	177.8	185.0	192.1	198.7	205.3	211.6	217.8

Chart for determining inlet proportions and required head over inlet.

Figure 3

ANTIVORTEX WALLS FOR CLOSED CONDUIT SPILLWAYS

Purpose:

This EFH supplement has been developed to provide guidance in selecting the type and proportioning of antivortex walls for closed conduit spillways.

Background:

A device to control the formation of vortices at the entrance to closed conduit spillways is a necessity for reliable hydraulic performance. Air entering the spillway through a vortex replaces the water, thus reducing the rate of flow of water discharging through the spillway. This reduction in discharge increases as the vortex strength increases. The greatest need for the antivortex device is at low submergences of the inlet, slightly above the elevation where the spillway first flows completely full.

The canopy inlet (sheet 4 of 8) was developed at the Missouri Agricultural Experiment Station. Other recommendations in this supplement are based on hydraulic model studies performed by the Agricultural Research Service located at the St. Anthony Falls Hydraulic Laboratory, Minneapolis, Minnesota.

Types:

Eleven types of antivortex devices for six types of inlets are included in this supplement. These are:

- Hooded inlet with cover plate.
- Hooded inlet with longitudinal splitter wall*.
- Square riser (2D x 2D) with hooded inlet*.
- Canopy inlet.
- Pipe drop inlet with longitudinal splitter wall*.
- Pipe drop inlet with tangent splitter wall*.
- Pipe drop inlet with horizontal plate.
- Rectangular drop inlet with longitudinal splitter wall*.
- Rectangular drop inlet with transverse splitter wall*.
- Square drop inlet with longitudinal splitter wall*.
- Square drop inlet with transverse splitter wall*.

*Vertical dimension of splitter wall can be reduced to equal the interval between normal pool and design high water elevations, when applicable.

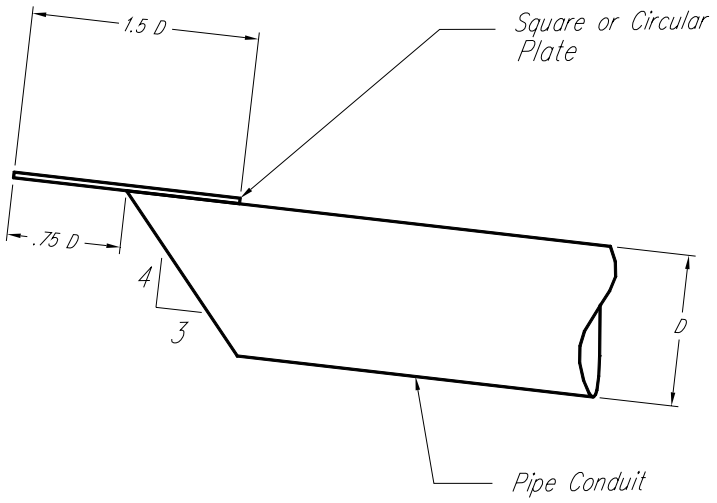

HOOD INLET WITH COVER PLATE

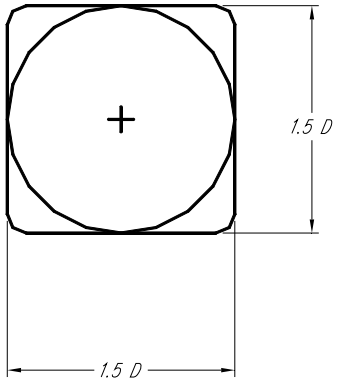

ANTIVORTEX PLATE

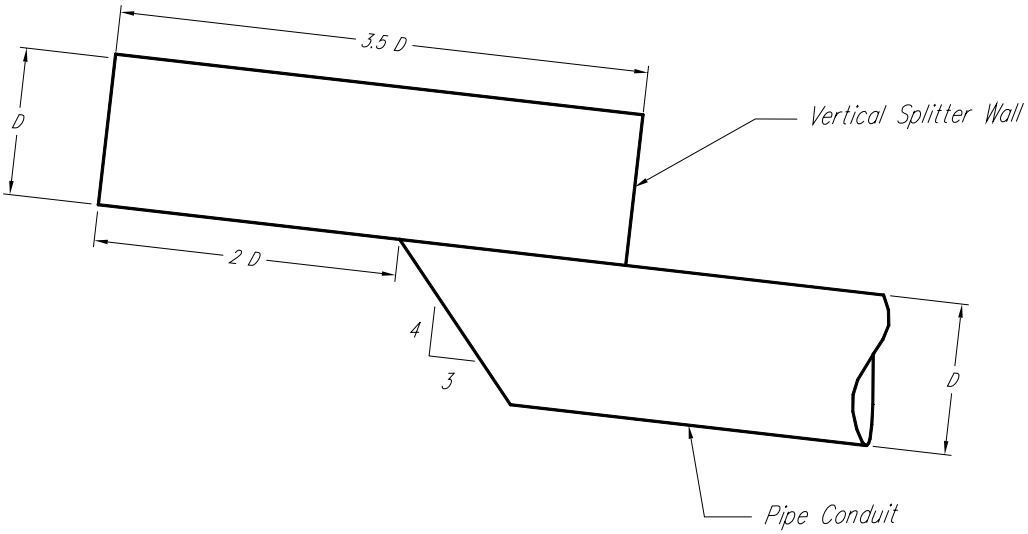

HOOD INLET WITH LONGITUDINAL SPLITTER WALL

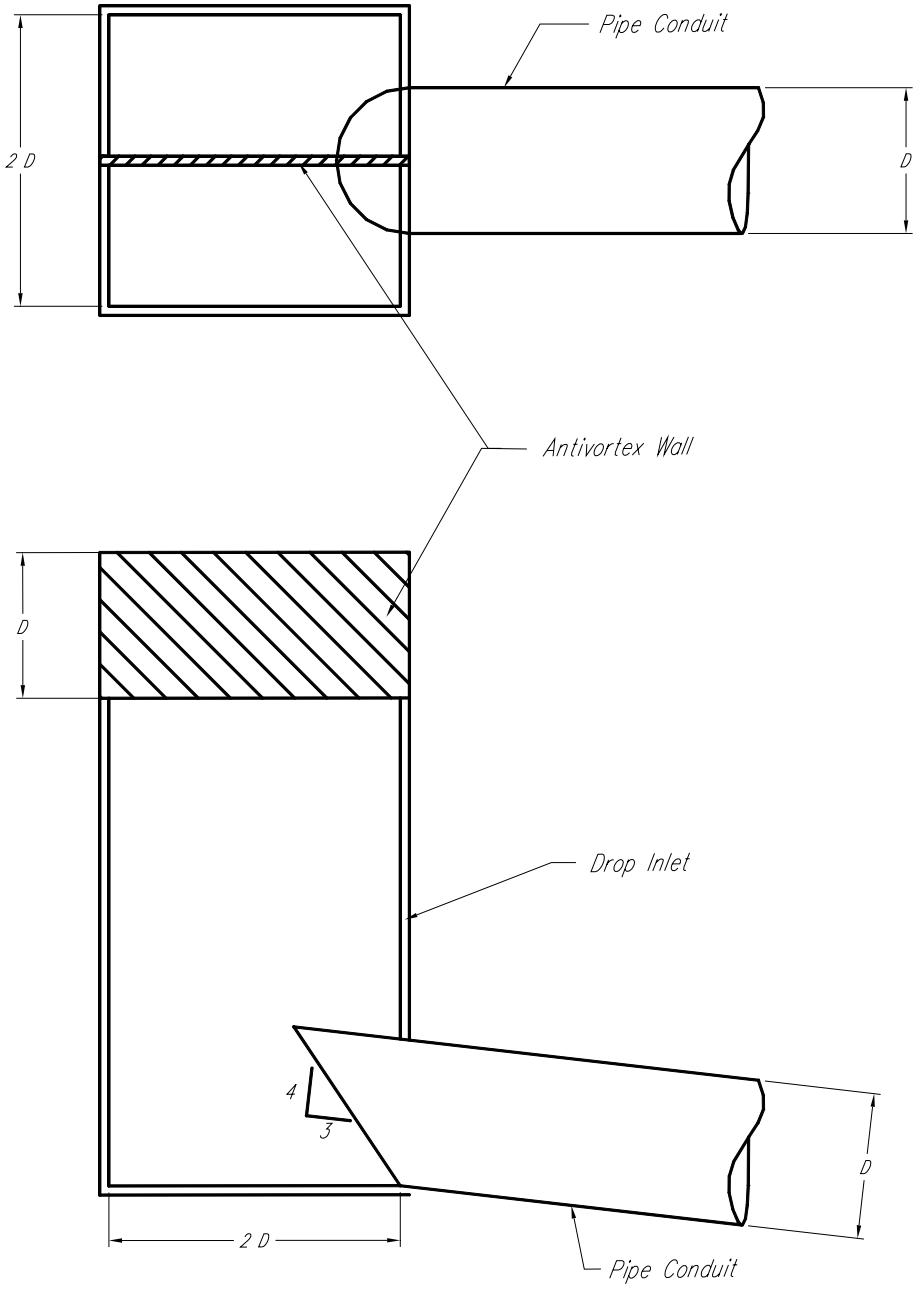

SQUARE RISER (2D X 2D) WITH HOOD INLET

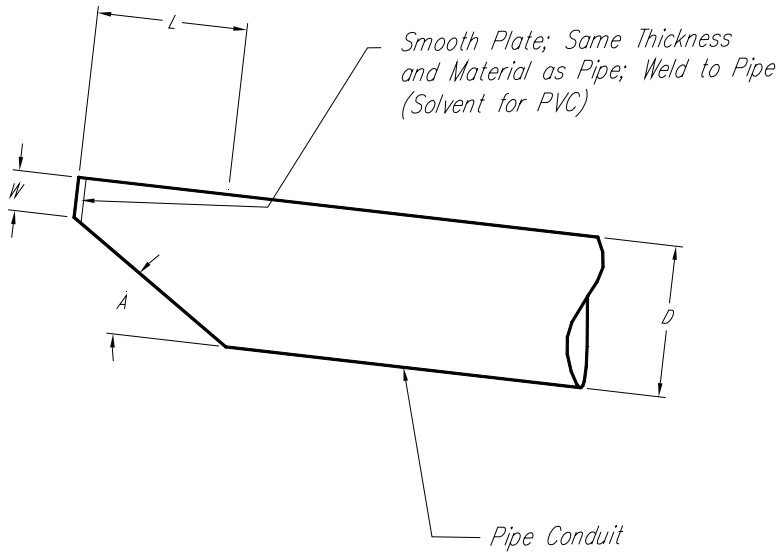

CANOPY INLET

Plate; same thickness and material as pipe; weld to pipe (solvent for PVC).

Pipe Diameter in Inches	Pipe Grade %	W Inches	L Inches	A Degrees
6	0-5	1 1/8	3 1/4	56
	5.1-15	1 1/4	4 7/8	45
	15.1-25	1 5/8	6 5/8	33
8	0-5	1 1/2	4 3/8	56
	5.1-15	1 5/8	6 3/8	45
	15.1-25	2 1/8	8 3/4	33
10	0-5	1 7/8	5 3/8	56
	5.1-15	2	8	45
	15.1-25	2 5/8	11	33
12	0-5	2 1/4	6 1/2	56
	5.1-15	2 3/8	9 5/8	45
	15.1-25	3 1/4	13 1/4	33

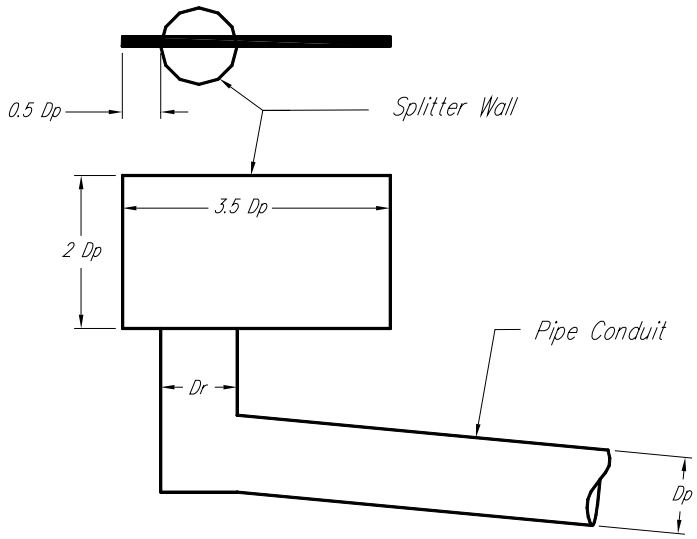

PIPE DROP INLET WITH LONGITUDINAL SPLITTER WALL

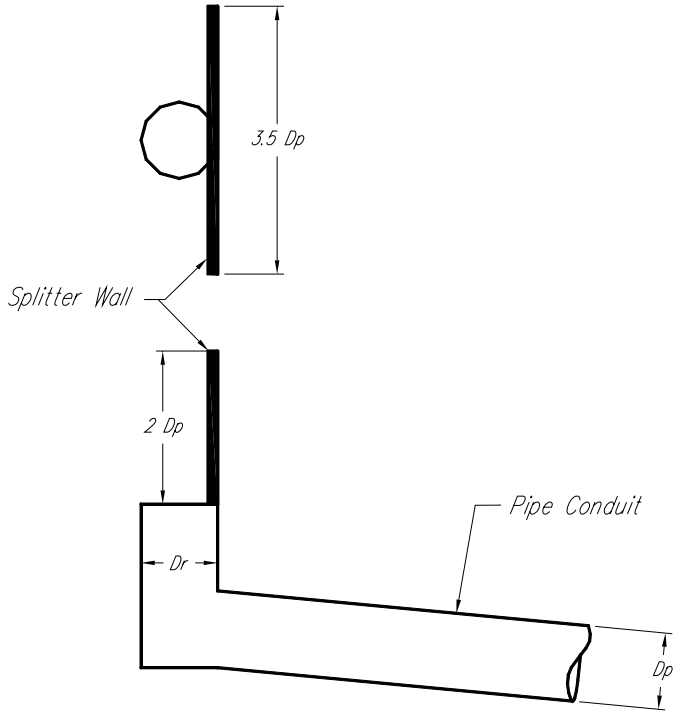

PIPE DROP INLET WITH TANGENT SPLITTER WALL

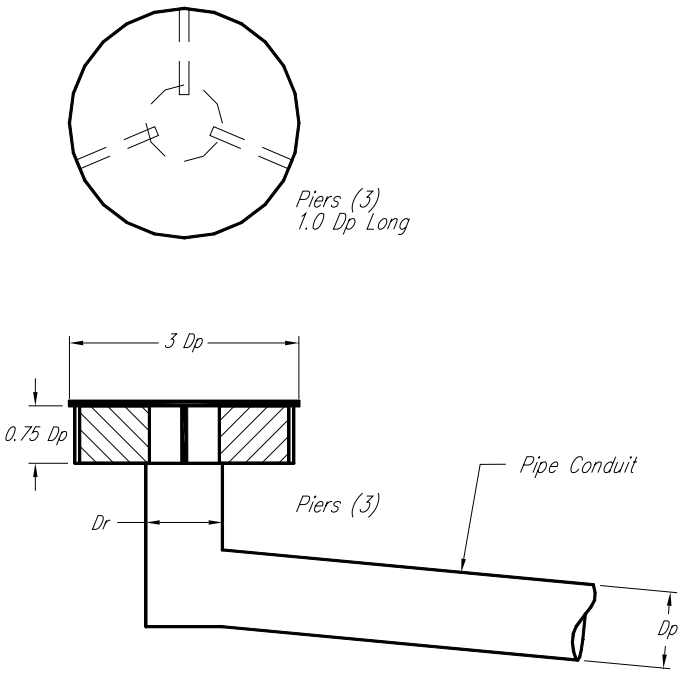

PIPE DROP INLET WITH HORIZONTAL PLATE

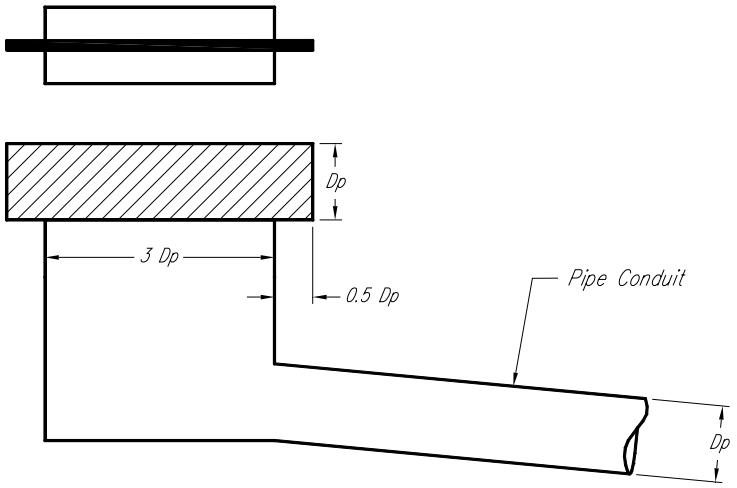

RECTANGULAR DROP INLET (3D x D) WITH LONGITUDINAL SPLITTER WALL

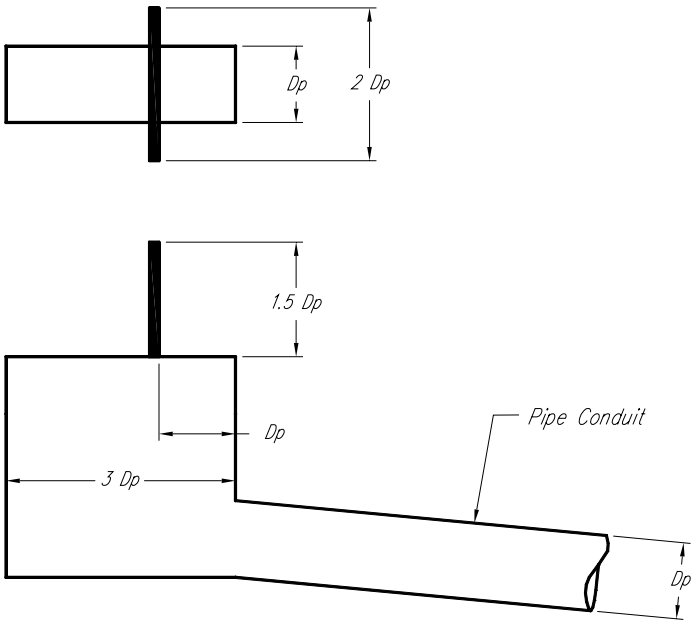

RECTANGULAR DROP INLET (3D x D) WITH TRANSVERSE SPLITTER WALL

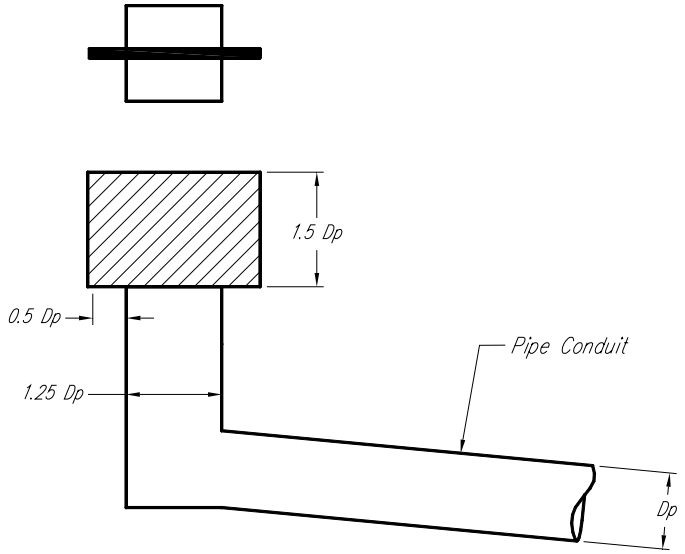

SQUARE DROP INLET WITH LONGITUDINAL SPLITTER WALL

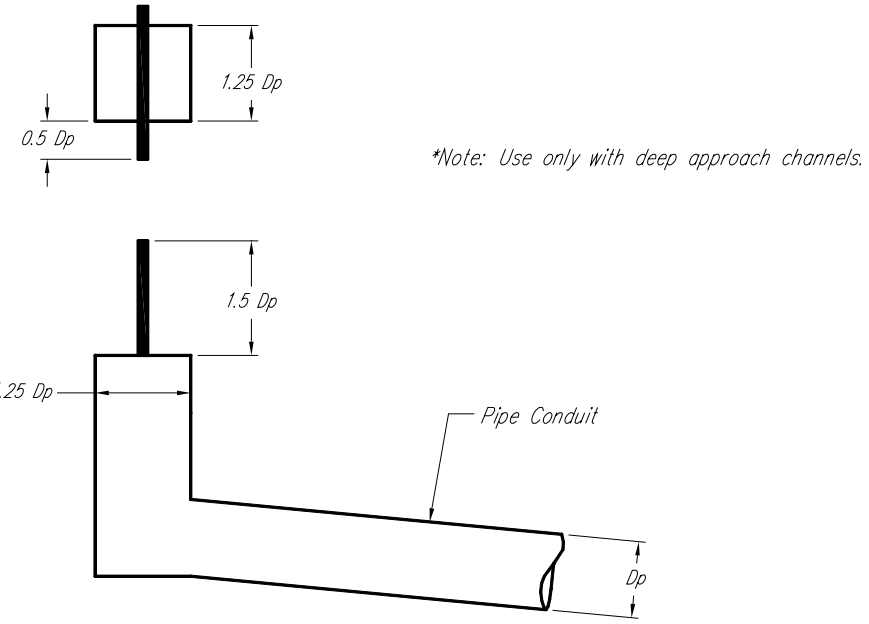

SQUARE DROP INLET WITH TRANSVERSE SPLITTER WALL

CONCRETE BLOCK CHUTE

Description

The concrete block chute is a structure with its flow area lined with pre-cast concrete building blocks. The earth sub-grade is shaped to the lines and grade of the structure, covered with 3 to 6 inches of sand or gravel, and filter fabric is placed over the sand or gravel before placing the concrete blocks. The openings in the blocks are filled with loose, friable soil and seeded to grass.

Functional Use

The concrete block chute may be used to control over-falls or abrupt changes in grade of a natural or constructed waterway; prevent erosion at the ends of waterways; lower water over drainage ditch-banks, and conduct water from an adjacent flat area to the bottom of a ditch.

Design

Concrete block chutes shall be designed in accordance with NRCS Ohio Engineering Standard – Grade Stabilization Structure (410). Structures can be either full flow or island type and shall have the minimum design capacity shown in this standard.

The capacity of the structure Q in cfs, is determined by the equation:

$Q = CLH_p^{1.832}$
C = coefficient = 1.455 (according to a model study by Evans, Illinois, SCS, 1987)
L = Weir length or bottom width of chute (feet).
H_p = Maximum water depth above the chute entrance apron (feet).

The model study by Evans (1986) concluded that tailwater depth equal to the maximum water surface above the chute entrance must be provided to ensure that the hydraulic jump occurs on the structure. The level outlet apron may be submerged to provide needed tailwater depth.

Ohio Standard Drawing No. N 307 has been developed for use with this structure. Table 1 of this exhibit, CAPACITY OF BLOCK CHUTES, shall be used to size the structure. The enclosed computation sheet, Table 2, can also be used to compute several of the quantities.

Chute widths will normally be less than the upstream waterway width. The last 50 feet of the waterway may be used for a transition section to change the bottom width and/or side slopes of the waterway to match the chute inlet dimensions. Dikes may be required to ensure that the design flow is directed to the structure. The height of the dike and/or sides of the inlet section of the chute should provide 1.0 feet of freeboard above the depth of flow in the waterway.

Construction

Particular attention must be paid to the proper installation of the structure. Care must be taken to use the right materials and follow the placement steps as explained in the enclosed construction specification.
The filter fabric specified must have an effective opening size of 0.25 mm (250 microns) or smaller. Several methods are presently in use by manufacturers for measuring the effective opening size and it is important that the designer identify the type of procedure used by the manufacturer. The most common methods for expressing the equivalent opening size are listed below:

1. Sizes listed in units of microns or millimeters.
2. Equivalent Opening Size (EOS) expressed in U.S. Standard Sieve Numbers.
3. Apparent Opening Size (AOS) expressed in U.S. Standard Sieve Numbers.

4. 0_{95} expressed in microns or millimeters.

The effective opening size of 0.25 mm equals U.S. Standard Sieve Number 60. Since the sieve numbers represent the number of openings per inch of length, the sieve numbers increase as the effective opening sizes get smaller.

CAPACITY OF BLOCK CHUTES – CFS

Hp (Feet)				Bottom Width (Feet)*
1.0	1.5	3.0	2.5	
4	8	13	20	2.6 (4)
8	15	27	40	5.2 (8)
12	23	40	60	7.8 (12)
15	31	54	81	10.3 (16)
19	39	67	101	12.9 (20)
23	47	81	121	15.5 (24)
27	54	94	141	18.1 (28)
31	62	107	161	20.7 (32)
35	70	121	181	23.3 (36)
39	77	134	201	25.9 (40)

*Number in parentheses is the chute bottom width in number of blocks.

TABLE 1

BLOCK CHUTE QUANTITIES COMPUTATION SHEET

Concrete Blocks

f (ft)	x (ft)	z (ft)	Chute Length # Blocks	x Chute Width # Blocks 1/	= # Blocks In Floor	+ # Blocks In Both Sides	= Total # Blocks
3	8.9	9.2	17	x	=	+ 126	=
4	12.8	13.2	20	x	=	+ 150	=
5	15.2	15.8	22	x	=	+ 166	=
6	19.0	19.7	25	x	=	+ 182	=

(Choose One Row)

1/ # Blocks in Chute Width based on Table 1.

Filter Fabric

Total # Blocks	x 0.9	= A	Bottom Width (ft.)	+ 4	=	x 4	= B	Total Filter Fabric (sq. ft.) A + B
	x 0.9	=		+ 4	=	x 4	=	

Plastic Material

Bottom Width (ft)	+ 4	=	x 3	= Plastic Material (sq. ft.)
	+ 4	=	x 3	=

Table 2

TIMBER SPILLWAYS

Design Charts

The timber spillway design charts in this exhibit are to be used with Standard Drawings OH-N-309 and OH-N-310. Both straight wall and dropbox structures are included.

DEFINITIONS:

Q	=	Design capacity of structure in cubic feet per second (cfs).
b	=	Dimension of box perpendicular to the headwall in feet (ft.) for dropbox structures.
w	=	Width of box in feet (ft.) for dropbox structures.
l	=	Weir length in feet (ft.); notch width for straight drop structures; sum of 2b+w for dropbox structures.
h	=	Design head for the structure; also the notch height in feet (ft.).
f	=	Overfall; distance from the weir to the box floor in feet (ft.).
BW	=	Bottom width of approach channel in feet (ft.).
X	=	Distance from the side of the box to the toe of the dike (ft.).

DESIGN CRITERIA

Straight Drop Spillways – Standard Drawing OH-N-309

Q	=	Range from 22 cfs to 62 cfs.
f	=	Overfall from 3.0 ft. to 4.0 ft.
L	=	Weir length is 8 ft.
h	=	Heads range from 1.0 ft. to 2.0 ft.

Selection of the head and overfall shall be based on the site topography, dimensions of the drainway entering the structure, economics and design criteria.

STRAIGHT DROP SILLWAY CAPACITY

Weir Length (L)	Capacity cfs		
	h=1.0	h=1.5	h=2.0
8	22	40	62

Dropbox Spillways – Standard Drawing OH-N-310

Q = Range from 41 cfs to 158 cfs.
f = Overfall from 3.0 ft. to 4.0 ft.
L = Weir length is either 15 ft. or 23 ft. with box dimensions of 3'6" x 8'0" or 7'6" x 8'0" respectively.
h = Heads range from 1.0 ft. to 2.0 ft.
BW = The approach channel bottom width shall be a minimum of 24 feet.

Selection of box dimensions, head and overfall shall be based on the site topography, dimensions of the drainway entering the structure, economics, and design criteria.

DROPBOX SPILLWAY CAPACITY

Box Depth (b)	Box Width (w)	Weir Length (L)	Minimum "X"	Capacity cfs h=1.0	h=1.5	h=2.0
3'6"	8'0"	15	2	41	78	122
7'6"	8'0"	23	4	53	100	158

Emergency Spillways

For island type structures an emergency spillway shall be constructed on one or both sides of the structure. The crest elevation of the emergency spillway shall be set 0.2 feet below the top of the headwall to ensure that emergency flow will develop when the structure spillway reaches design capacity.

The top of dike shall be set at a minimum of 1 foot above the flow depth in the emergency spillway or top of headwall, whichever is higher.

QUANTITIES

STRAIGHT DROP SPILLWAY STANDARD DRAWING OH-N-309

Overfall F = 3'

H (ft.)	Boards 2" x 6" T & G (lin. ft.)	Posts 6" x 6" 4'	6'	8'	10'	Boards 2" x 8" (8' length)
1.0	512	1	4	8	---	3
1.5	536	1	---	8	4	3
2.0	560	1	---	8	4	3

Overfall F = 3.5'

H (ft.)	2" x 6" T & G (lin. ft.)	Posts 6" x 6" 4'	6'	8'	10'	2" x 8" (8' length)
1.0	552	1	---	8	4	3
1.5	576	1	---	8	4	3
2.0	600	1	---	8	4	3

Overfall F = 4.0'

H (ft.)	2" x 6" T & G (lin. ft.)	Posts 6" x 6" 4'	6'	8'	10'	2" x 8" (8' length)
1.0	592	1	---	8	4	3
1.5	616	1	---	8	4	3
2.0	640	1	---	8	4	3

Quantities Cont'd.

Drain Fill	Behind Structure – 2.4 cubic yards
Weir Protection	
Riprap Option Riprap – 1 cubic yard	
or	
Concrete Block Option	Blocks – 27 each Drain Fill – 0.3 cubic yard
Structure Floor	
Concrete Option	Concrete – 1.1 cubic yards Drain Fill – 1 cubic yard
or	
Concrete Block Option	Blocks – 72 each Drain Fill – 1 cubic yard
or	
Riprap Option Drain Fill – 4 cubic yards	
Outlet Channel	
Riprap Option Drain Fill – 12 cubic yards	
or	
Concrete Block Option	Blocks – 112 each Drain Fill – 1.2 cubic yards

QUANTITIES

DROPBOX SPILLWAY STANDARD DRAWING OH-N-310

Overfall F = 3'

B	W	H	2" x 6" T & G	Posts 6" x 6"				Boards 2" x 8"			Boards 2" x 6"		
		(ft)	(lin. ft.)	4'	6'	8'	10'	8'	10'	12'	6'	8'	10'
		1.0	516	1	4	7	---	2	2	2	3	---	1
3'6"	8'0"	1.5	540	1	---	7	4	1	1	2	3	---	1
		2.0	564	1	---	7	4	1	1	2	3	---	1
		1.0	596	1	4	9	---	2	1	2	3	---	1
7'6"	8'0"	1.5	620	1	---	9	4	2	1	2	3	---	1
		2.0	644	1	---	9	4	2	1	2	3	---	1

Overfall F = 3.5'

B	W	H	2" x 6" T & G	Posts 6" x 6"				Boards 2" x 8"			Boards 2" x 6"		
		(ft)	(lin. ft.)	4'	6'	8'	10'	8'	10'	12'	6'	8'	10'
		1.0	558	1	---	7	4	1	1	2	---	3	1
3'6"	8'0"	1.5	582	1	---	7	4	1	1	2	---	3	1
		2.0	606	1	---	7	4	1	1	2	---	3	1
		1.0	646	1	---	9	4	2	1	2	---	3	1
7'6"	8'0"	1.5	670	1	---	9	4	2	1	2	---	3	1
		2.0	694	1	---	9	4	2	1	2	---	3	1

Overfall F = 4.0'

B	W	H (ft)	2" x 6" T & G (lin. ft.)	Posts 6" x 6" 4'	6'	8'	10'	Boards 2" x 8" 8'	10'	12'	Boards 2" x 6" 6'	8'	10'
		1.0	600	1	---	7	4	1	1	2	---	3	1
3'6"	8'0"	1.5	624	1	---	7	4	1	1	2	---	3	1
		2.0	648	1	---	7	4	1	1	2	---	3	1
		1.0	696	1	---	9	4	2	1	2	---	3	1
7'6"	8'0"	1.5	720	1	---	9	4	2	1	2	---	3	1
		2.0	744	1	---	9	4	2	1	2	---	3	1

		3'6" x 8'0" Box	7'6" x 8'0" Box
Drain Fill – behind structure		2 cubic yards	2.5 cubic yards
Weir Protection			
Riprap Option	Riprap	1.3 cubic yards	2.1 cubic yards
or			
Concrete Block Option			
	Blocks	46 each	64 each
	Drain Fill	0.5 cubic yard	0.7 cubic yard
Structure Floor			
Concrete Option			
	Concrete	0.6 cubic yard	1.1 cubic yards
	Drain Fill	0.5 cubic yard	1 cubic yard
or			
Concrete Block Option			
	Blocks	36 each	72 each
	Drain Fill	0.5 cubic yard	1 cubic yard
or			
Riprap Option			
	Riprap	1.8 cubic yards	3.9 cubic yards
Plastic Sheeting		85 feet^2	125 feet^2

Outlet Channel

Riprap Option		12 cubic yards
or		
Concrete Block Option		
Blocks		112 cubic yards
Drain Fill		1.2 cubic yards
Lag Screws	½" x 5"	8 each
Nails	6" ring	25 pounds

ALTERNATIVE GRASSED WATERWAY DESIGN PROCEDURE

Purpose

This NEH supplement has been developed to provide an alternative design procedure for grassed waterways.

Background

Many of the grassed waterways built in Ohio are for small drainage areas of 10 to 40 acres. Due to the construction equipment used to build them and the need to cross them with large farm equipment, most of these waterways are being built approximately 30 feet top width and 1 foot deep.

To simplify the design procedure for this size waterway, Figure 2 was developed to provide a direct answer. Several assumptions had to be made. Figure 1 shows the four zones, which the State has been divided into. Within a zone the counties have similar soils, MLRAs, ten year rainfalls, average watershed slopes, and runoff curve number for cropland.

Procedure

The drainage area and waterway grade must be determined first. If the waterway will have more than one grade, use the reach with the steepest grade for this procedure.

Enter Figure 2 with the waterway grade, project a vertical line up to the zone curve for the county, and read the drainage area in acres along the left side. This is the maximum number of acres that the T=30', D=1.0' design can carry at the given grade. The figure can be used in reverse to determine the maximum grade allowable for a given number of acres.

Also for any combination of drainage area and waterway grade that plots below the proper zone curve, the T=30', D=1.0' design is adequate.

All waterway grades below one percent and drainage areas less than 40 acres can use the T=20', D=0.8' for grades up to 10 percent.

In all cases, if the site conditions are significantly different than the assumptions used in this procedure, the designer should use conventional design procedures found in the EFM or the grassed waterway computer program.

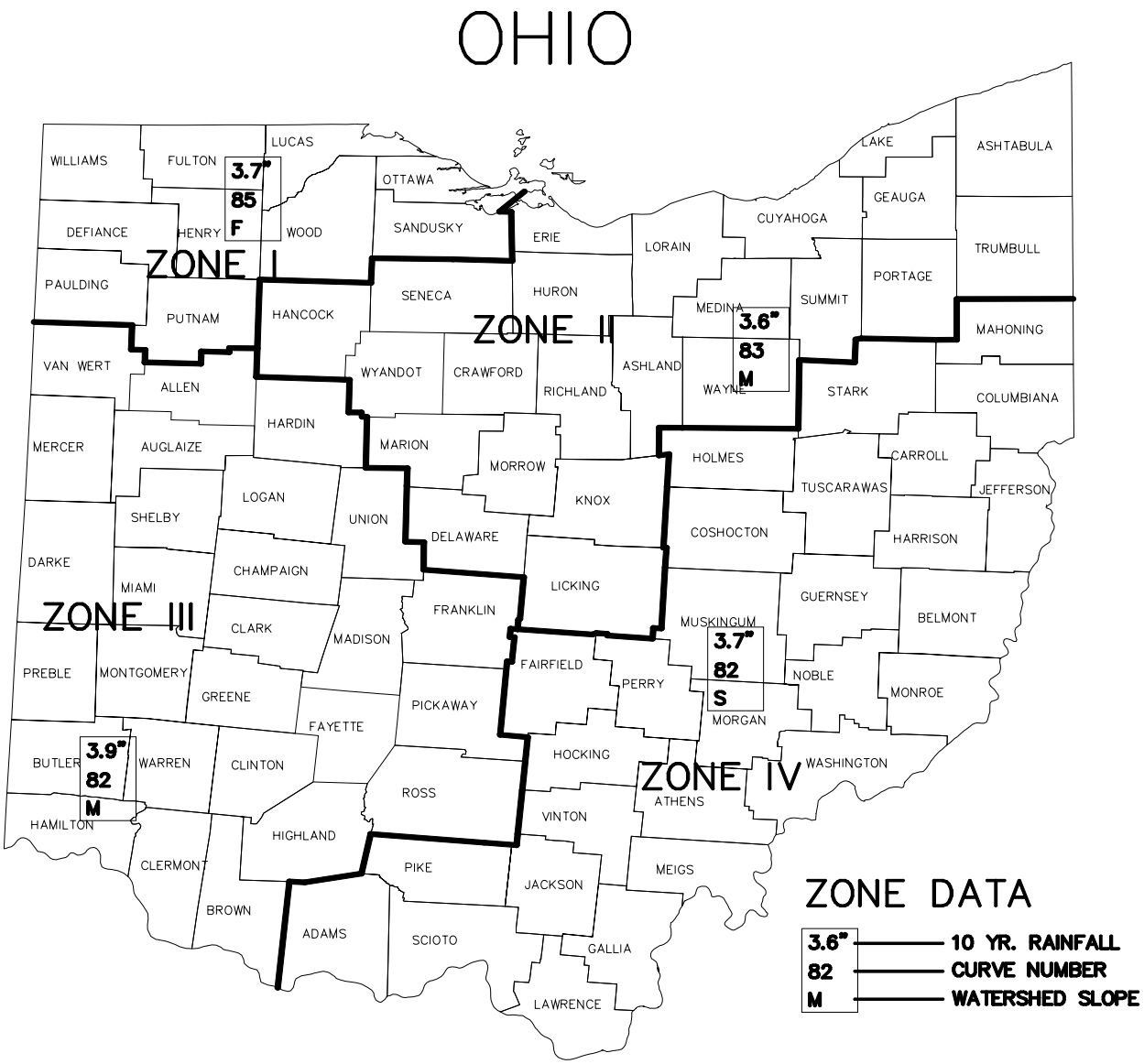

FIGURE 1
GRASSED WATERWAY DESIGN ZONES

GRASSED WATERWAY DESIGN
C–D RETARDANCE
MAX. VELOCITY = 4.0 FPS

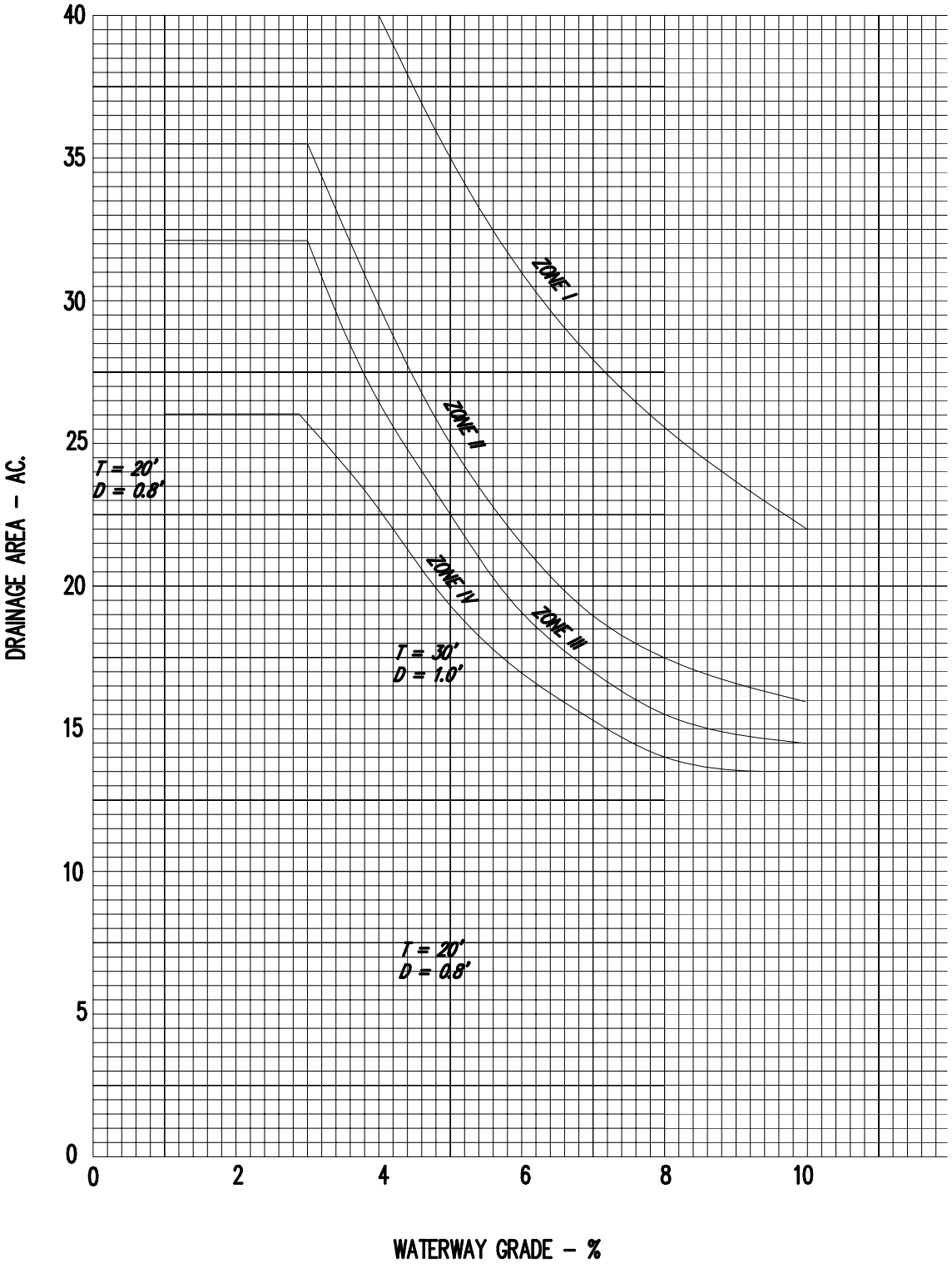

FIGURE 2

Retardance – D & B
Grade, % - 0.25 to 2.0

PARABOLIC WATERWAY DESIGN, WITHOUT FREEBOARD

	Grade, 0.25%			Grade, 0.50%			Grade, 0.75%			Grade, 1.0%			Grade, 1.25%			Grade, 1.50%			Grade, 2.0%		
V	0.5	1.0	1.5	0.5	1.0	1.5	0.5	1.0	1.5	0.5	1.0	1.5	0.5	1.0	1.5	0.5	1.0	1.5	0.5	1.0	1.5
D	1.5	2.1	2.5	1.0	1.6	1.8	0.8	1.4	1.6	0.7	1.2	1.4	0.7	1.1	1.3	0.6	1.0	1.2	0.5	0.8	1.1
Q	**Top Width**																				
5	22			27	11		32	14	7	34	15	8	36	17	9	39	19	10	43	20	12
10	43	15		55	23	12	63	27	14	68	31	17	73	34	19	77	36	20	85	40	23
15	65	24	12	82	34	18	95	41	22	102	46	25	109	50	28	115	54	31	128	60	35
20	87	32	16	110	46	24		54	29		61	33		67	37		71	41		79	47
25	108	41	21		57	30		68	36		77	41		84	47		89	51		99	58
30		49	25		69	36		82	43		92	50		101	56		107	61			70
35		57	29		80	41		95	50		107	58			66			72			82
40		65	33		92	47		109	57			66			75			82			93
45		73	37		103	53			64			75			84			92			105
50		81	42			59			72			83			94			102			
55		90	46			65			79			91			103						
60		98	50			71			86			100									
65		106	58			77			93												
70			63			83			100												
75			67			89															
80			75			95															
90			83			107															
100			92																		
110			100																		

V, permissible velocity of soil with vegetative retardance "D"
Depth and top width are for cross section with retardance "B"

Q, in cfs
V, in fps
D depth, in ft.
Top width, in ft.

Retardance – D & C
Grade, % - 0.25 to 2.0

PARABOLIC WATERWAY DESIGN, WITHOUT FREEBOARD

	Grade, 0.25%			Grade, 0.50%			Grade, 0.75%			Grade, 1.0%			Grade, 1.25%			Grade, 1.50%			Grade, 2.0%		
V	0.5	1.0	1.5	0.5	1.0	1.5	0.5	1.0	1.5	0.5	1.0	1.5	0.5	1.0	1.5	0.5	1.0	1.5	0.5	1.0	1.5
D	1.3	1.5	1.8	1.0	1.1	1.3	0.8	1.0	1.1	0.7	0.9	1.0	0.6	0.8	0.9	0.6	0.8	0.8	0.5	0.7	0.8
Q	**Top Width**																				
5	20			26	9		30	12	6	33	13	7	35	15	8	37	16	8	41	18	10
10	40	13		53	19	10	61	23	12	65	27	14	70	30	16	74	32	17	82	36	20
15	60	20	10	79	29	15	91	35	18	98	40	21	105	44	24	111	48	26	123	54	29
20	81	27	14	106	39	20	121	47	24		53	28		59	32		63	34		72	39
25	101	34	17		48	25		58	30		66	35		74	39		79	43		90	49
30		41	21		58	30		66	35		80	42		89	47		95	52		108	59
35		48	25		68	35		82	42		93	49		103	55		111	60			69
40		55	28		77	40		93	49		106	56			63			69			79
45		62	32		87	45		105	55			63			71			77			88
50		69	35		97	50			61			70			79			86			98
55		75	39		106	55			67			77			87			95			108
60		82	43			60			73			84			95			103			
65		89	46			65			79			91			102						
70		96	50			71			85			98									
75		103	53			76			91			105									
80			57			81			97												
90			64			91			109												
100			71			101															
110			78																		
120			85																		
130			93																		
140			100																		

V, permissible velocity of soil with vegetative retardance “D”.
Depth and top width are for cross-section with retardance “B”.

Q, in cfs
V, in fps
D depth, in ft.
Top width, in ft.

Retardance – D&B
Grade, % - 12 & 15

PARABOLIC WATERWAY DESIGN

Grade = 12%

V1	2.0	2.5	3.0	3.5	4.0	4.5	5.0	5.5	6.0
V2	0.8	1.0	1.3	1.6	1.9	2.2	2.5	2.9	3.3
D	0.5	0.6	0.7	0.7	0.7	0.8	0.8	0.8	0.9
Q	**Top Widths**								
15	49	36	27	21	17	14	11	10	8
20	66	48	36	28	22	18	15	13	11
25	82	60	46	35	28	23	19	16	13
30	99	72	55	42	34	28	23	19	16
35	115	84	64	49	39	32	27	22	19
40		96	73	56	45	37	31	25	21
45		108	82	63	51	41	34	28	24
50			91	70	56	46	38	32	27
55			100	77	62	50	42	35	29
60			109	84	67	55	46	38	32
65				91	73	60	49	41	35
70				98	79	64	53	44	37
75				105	84	69	57	47	40
80					90	73	61	50	43
90					101	82	68	57	48
100					112	92	76	63	53
110						101	84	69	59
120						110	91	76	64
130							99	82	69
140							106	88	75
150							114	94	80
160								101	85
170								107	90
180								113	96

Grade = 15%

V1	2.0	2.5	3.0	3.5	4.0	4.5	5.0	5.5	6.0
V2	0.9	1.0	1.2	1.5	1.8	2.2	2.5	2.8	3.2
D	0.5	0.6	0.6	0.6	0.7	0.7	0.7	0.7	0.8
Q	**Top Widths**								
15	53	40	31	23	19	15	13	11	9
20	71	53	41	31	26	21	17	14	12
25	89	66	51	39	32	26	22	18	15
30	107	80	61	47	38	31	26	22	18
35	125	93	71	55	45	36	30	25	21
40		106	81	62	51	41	35	29	24
45		119	91	70	57	46	39	32	27
50			102	78	64	51	43	36	31
55			112	86	70	56	48	40	34
60				93	76	61	52	43	37
65				101	83	67	56	47	40
70				109	89	72	60	50	43
75					95	77	65	54	46
80					102	82	69	58	49
90					115	92	78	65	55
100						102	86	72	61
110						112	95	79	67
120							103	86	73
130							112	93	79
140								101	85
150								108	91
160								115	97

Retardance – D&C
Grade, % - 12 & 15

PARABOLIC WATERWAY DESIGN

Grade = 12%

V1	2.0	2.5	3.0	3.5	4.0	4.5	5.0	5.5	6.0
V2	1.3	1.7	2.1	2.6	3.0	3.5	4.1	4.6	5.1
D	0.4	0.4	0.5	0.5	0.5	0.6	0.6	0.6	0.7
Q	**Top Widths**								
15	43	31	23	18	14	12	10	8	7
20	58	41	31	24	19	16	13	11	9
25	72	51	38	30	24	20	16	14	12
30	87	61	46	36	29	24	19	16	14
35		71	54	42	34	27	23	19	16
40		82	61	47	38	31	26	22	18
45		92	69	53	43	35	29	24	21
50			76	59	48	39	32	27	23
55			84	65	53	43	36	30	25
60			92	71	57	47	39	33	28
65			99	77	62	51	42	35	30
70				83	67	55	45	38	32
75				89	72	59	49	41	34
80				95	76	63	52	43	37
90					86	70	58	49	41
100					95	78	65	54	46
110						86	71	60	51
120						94	78	65	55
130							84	70	60
140							90	76	64
150							97	81	69
160								87	73
170								92	78
180								97	83
190									87
200									92

Grade = 15%

V1	2.0	2.5	3.0	3.5	4.0	4.5	5.0	5.5	6.0
V2	1.3	1.7	2.1	2.6	3.0	3.5	3.9	4.5	5.0
D	0.4	0.4	0.4	0.5	0.5	0.5	0.5	0.5	0.6
Q	**Top Widths**								
15	47	34	26	20	16	13	11	9	8
20	63	45	34	26	22	18	15	12	11
25	79	57	43	33	27	22	19	15	13
30	95	68	51	39	33	26	22	18	16
35		79	60	46	38	31	26	22	18
40		91	68	53	43	35	30	25	21
45			77	59	49	39	33	28	24
50			85	66	54	44	37	31	26
55			94	72	60	48	41	34	29
60				79	65	53	44	37	31
65				85	70	57	48	40	34
70				92	76	61	52	43	37
75				98	81	66	55	46	39
80					86	70	59	49	42
90					97	79	66	55	47
100						87	74	61	52
110						96	81	68	58
120							88	74	63
130							96	80	68
140								86	73
150								92	78
160								98	84
170									89
180									94
190									99

Retardance – C
Grade, % - 6, 8, 10, 12, 15

PARABOLIC STONE CENTER WATERWAY

	Grade 6 Percent		Grade 8 Percent		Grade 10 Percent		Grade 12 Percent		Grade 15 Percent	
V	8.0	10	8.0	10.0	8.0	10.0	8.0	10.0	8.0	10.0
D	1.3	1.6	1.1	1.3	1.0	1.2	0.9	1.1	0.8	0.9
					Top Width					
Q										
20							5		5	
25					5		6		6	4
30			5		6		7		7	5
35			6		7		8	5	8	6
40	6		7		8	5	9	6	10	7
45	7		8		9	6	10	6	11	7
50	7		9	6	10	7	11	7	12	8
55	8		9	6	11	7	12	8	13	9
60	9		10	7	12	8	13	8	14	9
65	9		11	7	12	9	14	9	16	11
70	10	7	12	8	13	9	15	10	17	11
75	11	7	13	9	14	10	16	10	18	12
80	12	8	14	9	15	10	18	11	19	13
90	13	9	15	10	17	12	20	13	21	15
100	14	10	17	11	19	13	22	14	24	16
110	16	11	19	13	21	14	24	15	26	18
120	17	11	21	14	23	16	26	17	29	20
130	19	12	22	15	25	17	29	18	31	21
140	20	13	24	16	27	18	31	19	33	23
150	22	14	26	17	29	20	33	21	36	24
160	23	15	27	18	31	21	35	22	38	26
170	25	16	29	19	33	22	37	24	40	28
180	26	17	31	20	34	23	39	25	43	29
190	27	18	32	22	36	25	42	26	45	31
200	29	19	34	23	38	26	44	28	47	33
220	32	21	38	25	42	29	48	31	52	38
240	35	23	41	27	46	31	53	33	57	39
260	38	25	44	30	50	34	57	36	62	42
280	40	27	48	32	54	36	61	39	67	45
300	43	29	51	34	57	39	66	42	71	49

VALUES of Q_0 in ft. $^3/_s$ /acre

STORAGE IN WATERSHED INCHES

RUNOFF IN WATERSHED INCHES

Vr \ Vs	0.1	0.2	0.3	0.4	0.5
0.2	0.05				
0.3	0.13	0.02			
0.4	0.20	0.04			
0.5	0.24	0.07	0.02		
0.6	0.34	0.13	0.04		
0.7	0.45	0.17	0.08	0.03	
0.8	0.55	0.23	0.12	0.06	
0.9	0.70	0.30	0.15	0.08	0.04
1.0	0.89	0.39	0.19	0.10	0.06

Note: Discharge values to the left of the hatched line are to be used for interpolation only. However, interpolated values should not exceed 0.47 ft. $^3/_s$ / acre.

TABLE B (EXPANDED)

"B" Retardance

EMERGENCY SPILLWAY BOTTOM WIDTHS FOR VARIOUS FLOW RATES AND HP VALUES

Discharge Cfs	Hp Values - feet											
	1.0	1.1	1.2	1.3	1.4	1.5	1.6	1.7	1.8	1.9	2.0	2.1
10	33	15	10	8								
15	50	23	15	10	8							
20	67	31	20	13	10	8						
25	83	38	25	17	13	10	8					
30	100	46	30	20	15	12	10	9	8			
35		54	35	23	18	14	12	10	9			
40		62	40	27	20	16	13	11	10	8		
45		69	45	30	23	18	15	13	11	9	8	
50		77	50	33	25	20	17	14	13	10	9	8
55		85	55	37	28	22	18	16	14	11	10	9
60		92	60	40	30	24	20	17	15	12	11	10
65		100	65	43	33	26	22	19	16	13	12	11
70			70	47	35	28	23	20	18	14	13	12
75			75	50	38	30	25	21	19	15	14	13
80			80	53	40	32	27	23	20	16	15	14
85			85	57	43	34	28	24	21	17	16	15
90			90	60	45	36	30	26	23	18	17	16
95			95	63	48	38	32	27	24	19	18	17
100			100	67	50	40	33	29	25	20	19	18
110				73	55	44	37	31	28	22	20	19
120				80	60	48	40	34	30	24	22	20
130				87	65	52	43	37	33	26	24	22
140				93	70	56	47	40	35	28	25	23
150				100	75	60	50	43	38	30	27	25
"X" Distance (ft)	**52**	**56**	**60**	**64**	**68**	**72**	**76**	**80**	**84**	**88**	**92**	**95**

Limitations For Use

1. *Erosion Resistant Soils*
2. *Si = 2 % or Greater*
3. *Level Section Length - 20' to 25'*
4. *Se = 2.5% to 4%*

*For other conditions use Tables 3A thru 3E

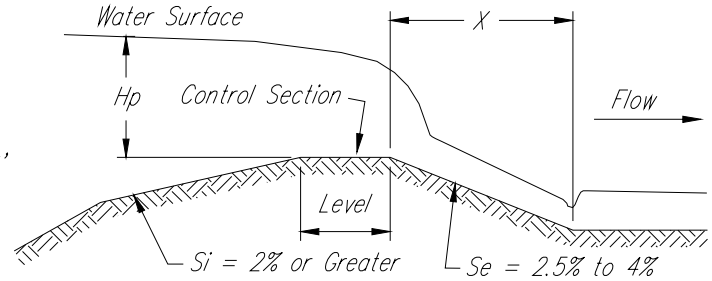

PROFILE ALONG CENTERLINE OF EARTH SPILLWAY

Legend

Hp - Depth of Water in Pond Above Crest (ft)
Si - Slope of Inlet Channel (%)
Se - Slope of Exit Channel (%)
X - Min. Distance (ft) of Exit Channel at Designed Slope. (Refers Only to Changing Grade to Flatter Slope)

"C" Retardance

EMERGENCY SPILLWAY BOTTOM WIDTHS FOR VARIOUS FLOW RATES AND HP VALUES

Discharge Cfs	Hp Values - feet											
	0.6	0.7	0.8	0.9	1.0	1.1	1.2	1.3	1.4	1.5	1.6	1.7
10	25	20	14	10	8							
15	38	30	21	15	10	8						
20	50	40	29	20	13	10	8					
25	63	50	36	25	17	13	10	8				
30	75	60	43	30	20	15	12	10	9	8		
35	88	70	50	35	23	18	14	12	10	9	8	
40	100	80	57	40	27	20	16	13	11	10	9	8
45		90	64	45	30	23	18	15	13	11	10	9
50		100	71	50	33	25	20	17	14	13	11	10
55			79	55	37	28	22	18	16	14	12	11
60			86	60	40	30	24	20	17	15	13	12
65			93	65	43	33	26	22	19	16	14	13
70			100	70	47	35	28	23	20	18	16	14
75				75	50	38	30	25	21	19	17	15
80				80	53	40	32	27	23	20	18	16
85				85	57	43	34	28	24	21	19	17
90				90	60	45	36	30	26	23	20	18
95				95	63	48	38	32	27	24	21	19
100				100	67	50	40	33	29	25	22	20
110					73	55	44	37	31	28	24	22
120					80	60	48	40	34	30	27	24
130					87	65	52	43	37	33	29	26
140					93	70	56	47	40	35	31	28
150					100	75	60	50	43	38	33	30
"X" Distance (ft)	**36**	**40**	**44**	**48**	**52**	**56**	**60**	**64**	**68**	**72**	**76**	**80**

Limitations For Use

1. *Erosion Resistant Soils*
2. *Si = 2 % or Greater*
3. *Level Section Length – 20' to 25'*
4. *Se = 2.5% to 4%*

**For other conditions use Tables 3A thru 3E*

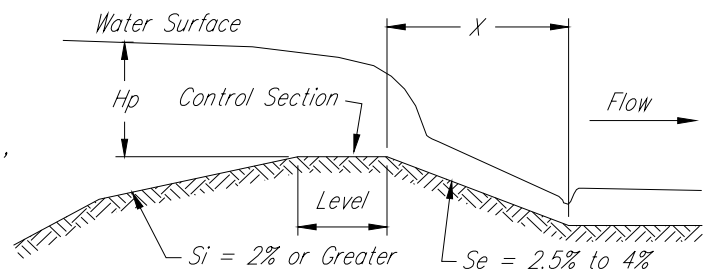

PROFILE ALONG CENTERLINE OF EARTH SPILLWAY

Legend

Hp – Depth of Water in Pond Above Crest (ft)
Si – Slope of Inlet Channel (%)
Se – Slope of Exit Channel (%)
X – Min. Distance (ft) of Exit Channel at Designed Slope. (Refers Only to Changing Grade to Flatter Slope)

"D" Retardance

EMERGENCY SPILLWAY BOTTOM WIDTHS FOR VARIOUS FLOW RATES AND HP VALUES

Discharge	Hp Values - feet											
	0.6	0.7	0.8	0.9	1.0	1.1	1.2	1.3	1.4	1.5	1.6	1.7
10	20	13	10	8								
15	30	20	15	10	8							
20	40	27	20	13	10	8						
25	50	33	25	17	13	10	8					
30	60	40	30	20	15	12	10	9	8			
35	70	47	35	23	18	14	12	10	9	8		
40	80	53	40	27	20	16	13	11	10	9	8	
45	90	60	45	30	23	18	15	13	11	10	9	8
50	100	67	50	33	25	20	17	14	13	11	10	9
55		73	55	37	28	22	18	16	14	12	11	10
60		80	60	40	30	24	20	17	15	13	12	11
65		87	65	43	33	26	22	19	16	14	13	12
70		93	70	47	35	28	23	20	18	16	14	13
75		100	75	50	38	30	25	21	19	17	15	14
80			80	53	40	32	27	23	20	18	16	15
85			85	57	43	34	28	24	21	19	17	15
90			90	60	45	36	30	26	23	20	18	16
95			95	63	48	38	32	27	24	21	19	17
100			100	67	50	40	33	29	25	22	20	18
110				73	55	44	37	31	28	24	22	20
120				80	60	48	40	34	30	27	24	22
130				87	65	52	43	37	33	29	26	24
140				93	70	56	47	40	35	31	28	25
150				100	75	60	50	43	38	33	30	27
"X" Distance (ft)	**36**	**40**	**44**	**48**	**52**	**56**	**60**	**64**	**68**	**72**	**76**	**80**

Limitations For Use

1. *Erosion Resistant Soils*
2. *Si = 2 % or Greater*
3. *Level Section Length – 20' to 25'*
4. *Se = 2.5% to 4%*

**For other conditions use Tables 3A thru 3E*

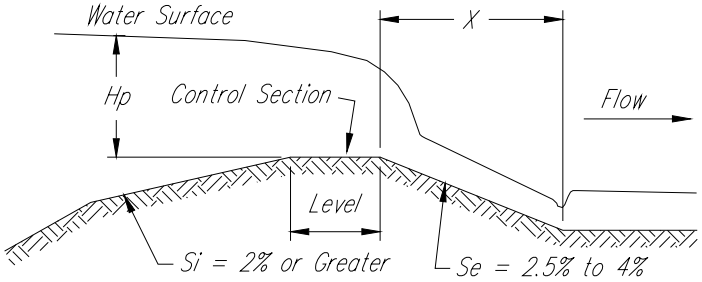

PROFILE ALONG CENTERLINE OF EARTH SPILLWAY

Legend

Hp – Depth of Water in Pond Above Crest (ft)
Si – Slope of Inlet Channel (%)
Se – Slope of Exit Channel (%)
X – Min. Distance (ft) of Exit Channel at Designed Slope. (Refers Only to Changing Grade to Flatter Slope)

DESIGN OF EMERGENCY SPILLWAY

Exhibit 11-3, figures 1, 2 and 3 have been prepared from a large number of reservoir routings to show the effect of storage above the principal spillway elevation and the ratio of DA/PA (drainage area divided by pool area) on reduction of peak outflow. These curves can be used to modify outflow for the emergency spillway design for ponds, which would cause little hazard if failure occurred.

For example:

Give: Watershed = 100 acres

25-year peak inflow = 190 cfs.

Crest of emergency spillway (ES) is 1.5 feet above principal spillway (PS).

Pond area at PS elevation = 2 acres.

PS has design capacity of 45 cfs with water surface at ES crest.

Determine: Dimensions of emergency spillway.

Peak inflow minus principal spillway design capacity.

190-45 = 145 cfs.

DA/PA = 100/2 = 50

From A, Exhibit 11-8, and Hp = 1.7 feet..
Percent of peak = 67.5 and from B, percent of peak = 54.5.

For 1.5 feet between PS and ES, percent of peak discharge, by interpolation, is $\frac{67.5 + 54.5}{2} = 61$.

Required ES capacity = 145 x 0.61 = 88 cfs.

A vegetated spillway with 3:1 side slopes and

Hp = 1.7 feet, and
b = 14 feet, will discharge
Q = 90 cfs, with
V = 5.3 fps, when
S = 2.5 percent (slope of exit section)\

Spillway is satisfactory.

2 FEET BETWEEN PRINCIPAL AND AUXILIARY SPILLWAY

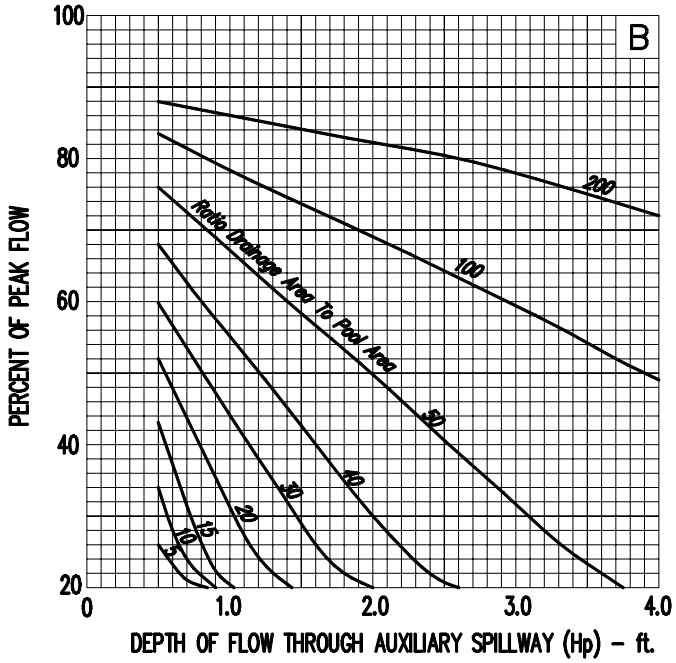

1 FOOT BETWEEN PRINCIPAL AND AUXILIARY SPILLWAY

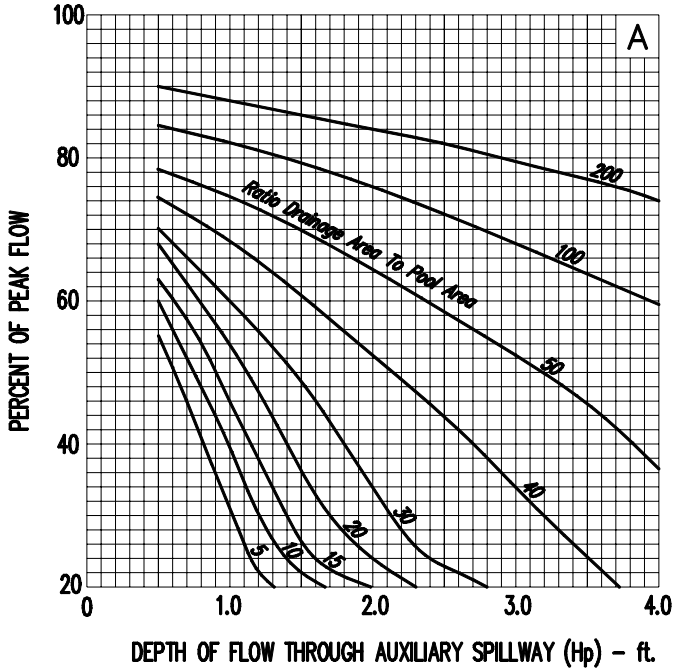

AUXILIARY SPILLWAY DISCHARGE IN PERCENT OF THE 25 – YEAR PEAK INFLOW

Figure 1

2 FEET BETWEEN PRINCIPAL AND AUXILIARY SPILLWAY

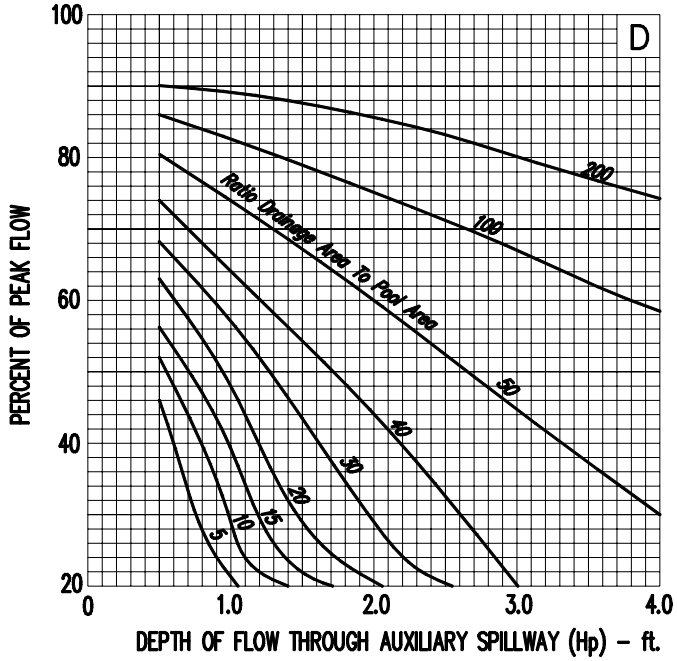

1 FOOT BETWEEN PRINCIPAL AND AUXILIARY SPILLWAY

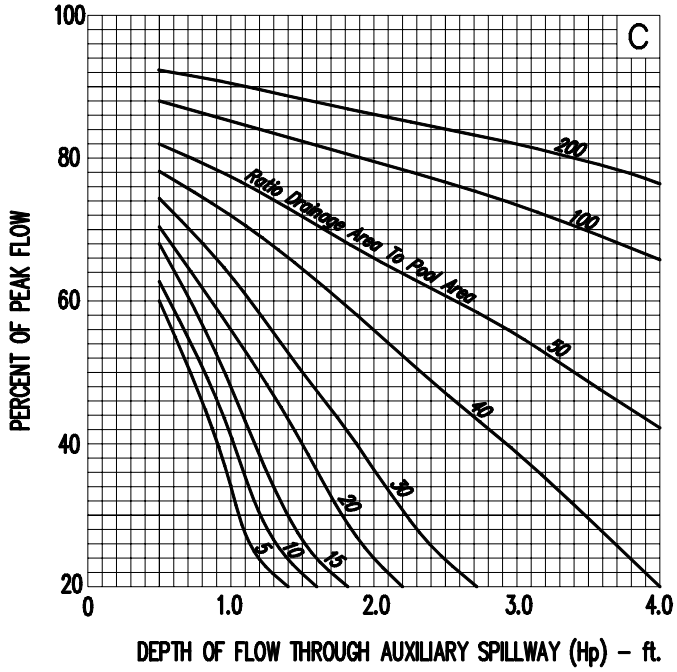

AUXILIARY SPILLWAY DISCHARGE IN PERCENT OF THE 50 – YEAR PEAK INFLOW

Figure 2

2 FEET BETWEEN PRINCIPAL AND AUXILIARY SPILLWAY

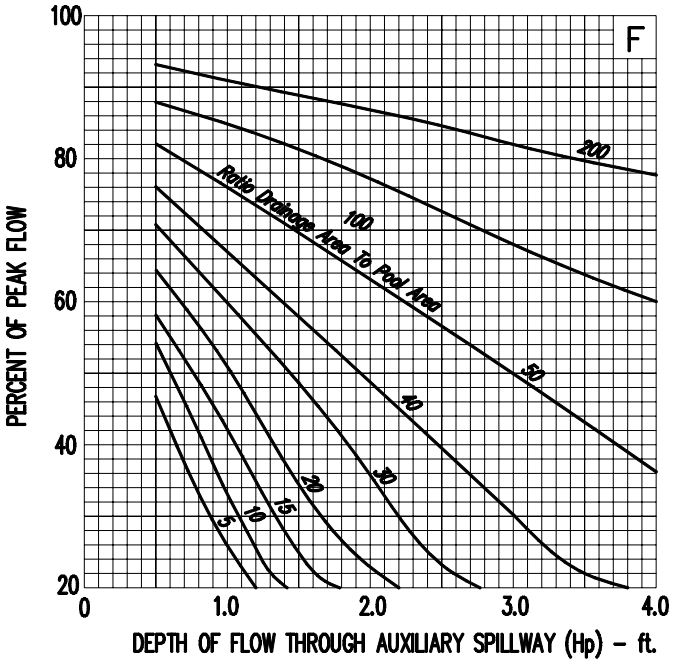

1 FOOT BETWEEN PRINCIPAL AND AUXILIARY SPILLWAY

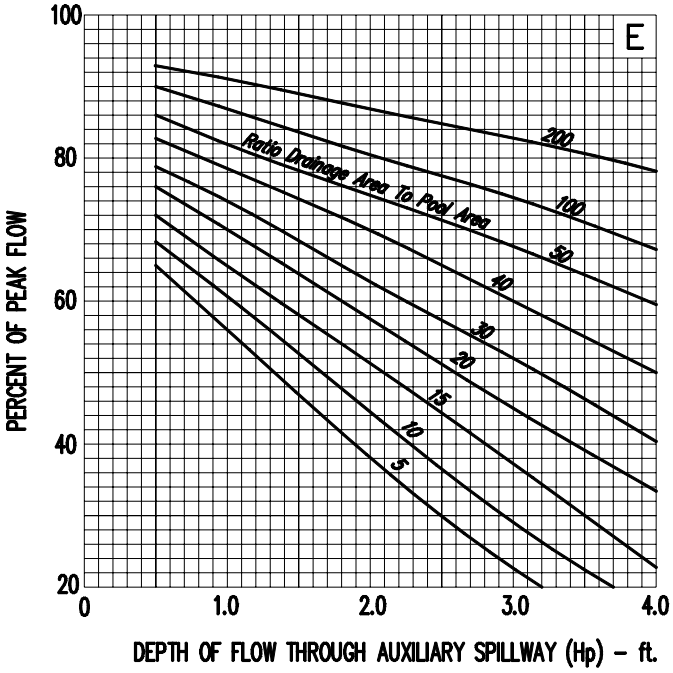

AUXILIARY SPILLWAY DISCHARGE IN PERCENT OF THE 100 – YEAR PEAK INFLOW

Figure 3

DESIGN OF PRINCIPAL SPILLWAY

Figure 2 provides an alternate routing method for proportioning the principal spillway capacity and temporary storage requirements of ponds and reservoirs. This procedure will give satisfactory results for structure drainage areas up to 2,000 acres with a single-stage principal spillway capacity that does not exceed 0.60 cfs per acre of drainage.

Figure 2 was developed from over 200 routings of typical embankment reservoirs limited to 24-hour rainfall durations with Type II distribution.

Quick return flow (QRF)[1/] can be a factor in sites where the QRF is significant when compared to the capacity of the principal spillway. Where applicable, QRF can be added to the release rate determined from Figure 2 prior to the selection of a conduit size or subtracted from the conduit capacity prior to determining required temporary storage from Figure 2.

Example problems follow to illustrate the use of Figure 2.

<u>Example 1</u>

Determine required volume of temporary storage for an embankment pond with the following conditions:

Drainage Area = 200 acres
Curve Number = 75
Rainfall = 4.5 inches
Conduit = 24-inch CMP-70 feet long
Pipe Outlet Centerline Elevation = 100.0 MSL
Principal Spillway Crest = 108.5 MSF
Conservation Pool = 31 acre = feet @ 108.5 MSI

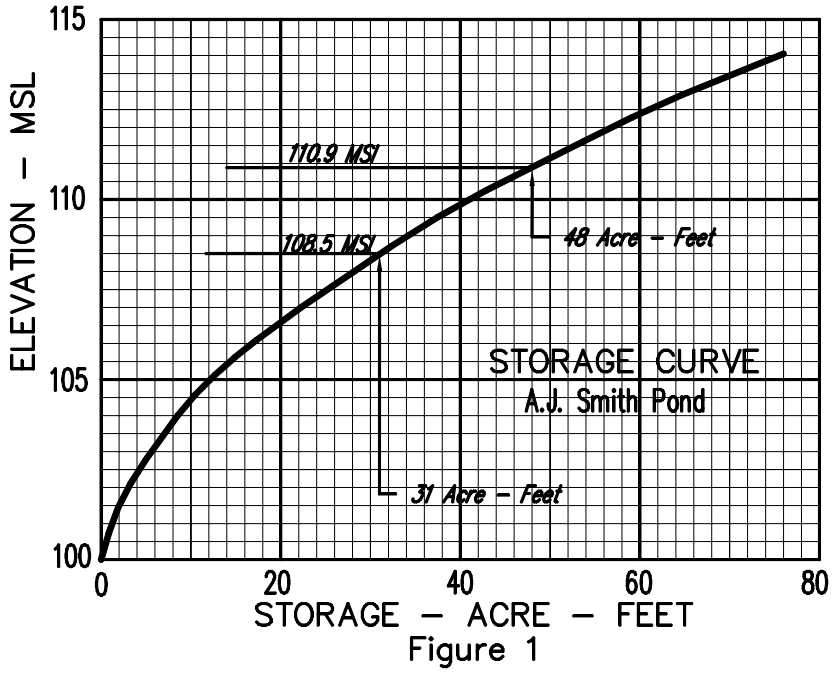

Figure 1

Solution:

1. From Exhibit OH2-4, sheet 6 of 14 for CN = 75 and with 4.5 inches rainfall: runoff = 2.04 inches.

2. Try an emergency spillway crest @ 110.0 MSL. Principal spillway capacity = 34.88 cfs (figure 6-25 with an estimated 10-foot head (110.0-100.0). Release rate = 35 cfs/200 acres = 0.175 cfs/acre (round to 0.18 cfs/acre).

3. From Figure 2 determine temporary storage needed for 2.04 inches of runoff and an estimated outflow discharge of 0.18 cfs acre. Temporary storage = 1.0 inch.

Temporary storage in acre-feet =

$$\frac{1.0\text{in}(200\text{ac})}{12\text{in/ft}} = 16.67 \text{ (round to 17) acre-feet.}$$

4. Check storage:

Total storage = 31 AF conservation use + 17 AF temporary storage.
Elevation @ 48 AF = 110.9 MSL (from storage curve).

Therefore, the actual head = 10.9 feet, which is more than the 10 feet assumed and actual discharge is approximately 36 cfs. This should be verified by recomputing storage using 36 cfs capacity. The check in this example showed no change is needed, because the release rate remains at 0.18 cfs/acre. Therefore, temporary storage requirements = 17 acre-feet.

<u>Example 2</u>

Assume the same storage curve, drainage area, curve number, rainfall, outlet centerline elevation, conduit length and conservation pool elevation as in Example 1, but a maximum elevation of 110.5 MSL is given for the crest of the emergency spillway. Determine the minimum diameter for the conduit.

Solution:

1. Runoff = 2.04 inches (Exhibit OH2-4,sheet 6 of 14 with 4.5 inches rainfall and CN=75)

2. Determine temporary storage:

Total storage = 45 acre-feet (@ 110.5 MSL)
Conservation storage = 31 acre-feet (@ 108.5 MSL)
Temporary storage = 45 acre-feet – 31 acre-feet = 14 acre-feet..

$$= \frac{14\text{AF}}{200\text{ac}}(12\text{in/ft}) = 0.84\text{inches}$$

3. Determine required release rate (Figure 2).

Release rate = 0.27 cfs/acre (Figure 2 with 2.04 inches runoff and 0.84 inches storage).
Required principal spillway capacity = 0.27 (200 acres) = 54 cfs.

4. Determine conduit size.

A 30-inch diameter CMP conduit 70 feet long will discharge approximately 61 cfs (from figure 6-25) with a head of 10.5 feet. Therefore, use a 30-inch diameter conduit.

5. Check weir flow.

h = head on weir = 110.5 MSL-108.5 MSL=2.0 feet.

Table on Exhibit OH6-3, figure 3, recommends a 36-inch diameter riser for a 30-inch diameter conduit.

Using a capacity of 61 cfs and a 36-inch diameter riser, the curves indicate that the conduit will flow full at depths over 1.7 feet head (h). Therefore, pipe will flow full at design elevation.

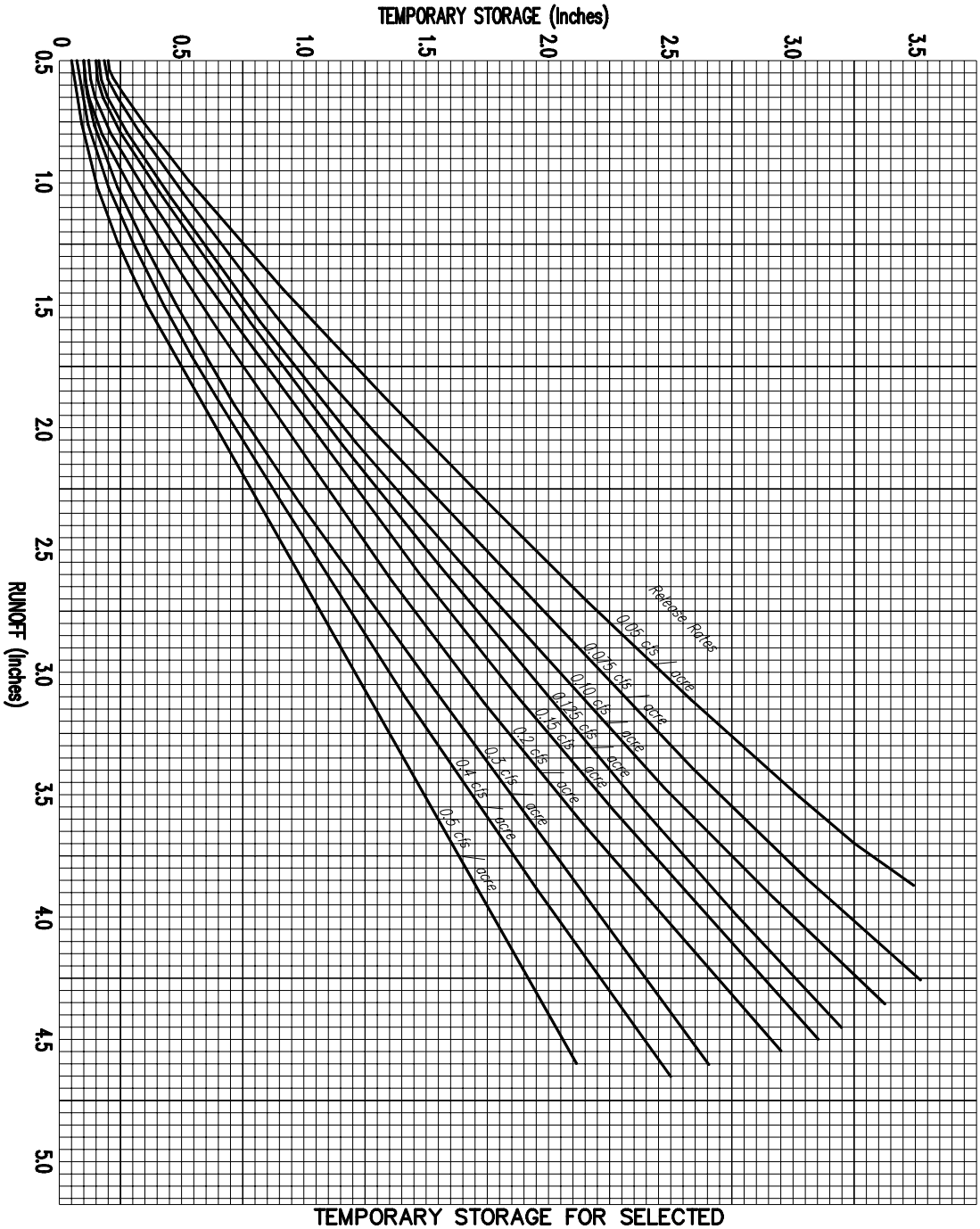

TEMPORARY STORAGE FOR SELECTED
RELEASE RATES FOR 24–HOUR–TYPE II RAINFALLS

Figure 2

SUBSURFACE DRAIN
DESIGN CHARTS

The following design charts are applicable for the design of subsurface drainage systems. Table I gives capacity required in cubic feet per second for applicable drainage area and drainage coefficient. Table II gives capacity provided in cubic feet per second for a given grade in percent, diameter of drain in inches, and value of Manning's "n".

Example: A main will be required to drain 82 acres and will be installed on a 0.15% grade. Use a drainage coefficient of 3/8 (.375) inch. Use clay pipe with normal installation and good alignment. Use Exhibit OH 14-1 sheet 2 of 12. Enter Table I and find that for 80 acres, the required CFS is 1.260, and for 2 acres the required CFS is .032. Then the required CFS for 82 acres is 1.260 plus 0.032, which equals 1.292. Enter Table II sheet 3 of 12 at 0.15% grade and find that it will require a 12-inch tile, which will carry 1.494 CFS.

Maximum Permissable Velocity in Drains Without Protective Measures

Soil Texture	Velocity – ft./sec.
Sand and Sandy Loam	3.5
Silt and Silt Loam	5.0
Silty Clay Loam	6.0
Clay and Clay Loam	7.0
Coarse Sand or Gravel	9.0

NOTE: When using grades that create velocities in excess of the allowable for the soil conditions, or velocities below 1.4 feet per second, refer to Engineering Standard 606 – Subsurface Drain for special design requirements.

All values in Table II below the applicable velocity line exceed that velocity.

All values in Table II generate velocities greater than 0.5 feet per second.

SUBSURFACE DRAIN CAPACITY
REQUIRED-CFS

Table I

DRAIN AREA ACRES	DRAINAGE CO-EFFICIENT						
	0.25 in 0.64 cm	0.375 in 0.95 cm	0.50 in 1.27 cm	0.75 in 1.91 cm	1.00 in 2.54 cm	1.50 in 3.81 cm	2.00 in 5.08 cm
0.5	.005	.008	.011	.016	.021	.032	.042
1	.011	.016	.021	.032	.042	.063	.084
2	.021	.032	.042	.063	.084	.126	.168
3	.032	.047	.063	.095	.126	.189	.252
4	.042	.063	.084	.126	.168	.252	.336
5	.053	.079	.105	.158	.210	.315	.420
6	.063	.095	.126	.189	.252	.378	.504
7	.074	.110	.147	.221	.294	.441	.588
8	.084	.126	.168	.252	.336	.504	.672
9	.095	.142	.189	.284	.378	.567	.756
10	.105	.158	.210	.315	.420	.630	.840
12	.126	.189	.252	.378	.504	.756	1.008
14	.147	.221	.294	.441	.588	.882	1.176
16	.168	.252	.336	.504	.672	1.008	1.344
18	.189	.284	.378	.567	.756	1.134	1.513
20	.210	.315	.420	.630	.840	1.260	1.681
25	.263	.394	.525	.788	1.050	1.576	2.101
30	.315	.473	.630	.945	1.260	1.891	2.521
35	.368	.551	.735	1.103	1.470	2.206	2.941
40	.420	.630	.840	1.265	1.681	2.521	3.361
50	.525	.788	1.050	1.576	2.101	3.151	4.201
60	.630	.945	1.260	1.891	2.521	3.781	5.042
70	.735	1.103	1.470	2.206	2.941	4.411	5.882
80	.840	1.260	1.601	2.521	3.361	5.042	6.722
90	.945	1.418	1.891	2.836	3.781	5.672	7.563
100	1.050	1.576	2.101	3.151	4.201	6.302	8.403
150	1.576	2.363	3.151	4.727	6.302	9.453	12.604
200	2.101	3.151	4.201	6.302	8.403	12.604	16.806

SUBSURFACE DRAIN CAPACITY
CFS

Table II
n-0.012

Smooth wall Pipe or Tile Tongue and Groove or Bell and Spigot Joints.

GRADE %	DIAMETER-INCHES							VEL. FT/SEC
	3	4	5	6	8	10	12	
.05		.046	.084	.136	.293	.531	.865	1.4
.10	.030	.064	.118	.192	.414	.749	1.220	
.15	.037	.079	.144	.235	.507	.917	1.494	
.20	.043	.090	.167	.272	.585	1.060	1.726	
.25	.048	.102	.187	.304	.655	1.185	1.931	
.30	.052	.111	.205	.333	.718	1.299	2.116	
.35	.0.56	.120	.221	.360	.775	1.403	2.286	
.40	.060	.128	.236	.384	.828	1.498	2.440	
.45	0.64	.136	.250	.408	.879	1.591	2.591	
.50	.067	.144	.264	.430	.926	1.676	2.730	3.5
.55	.071	.151	.277	.451	.972	1.759	2.865	
.60	.074	.158	.289	.471	1.015	1.837	2.992	
.65	.077	.164	.310	.490	1.126	1.911	3.112	
.70	.080	.170	.312	.509	1.096	1.984	3.232	
.75	.083	.176	.323	.526	1.134	2.053	3.344	
.80	.085	.182	.334	.541	1.171	2.119	3.452	
.85	0.88	.187	.344	.560	1.207	2.186	3.560	
.90	.090	.193	.354	.577	1.243	2.250	3.664	
.95	.093	.198	.364	.593	1.277	2.311	3.765	
1.00	.095	.203	.373	.608	1.310	2.371	3.861	5.0
1.50	.117	.249	.456	.744	1.604	2.904	4.730	6.0
2.00	.135	.287	.528	.859	1.852	3.352	5.460	

SUBSURFACE DRAIN CAPACITY
CFS

Table II
n-0.012

Smooth wall Pipe or Tile Tongue and Groove or Bell and Spigot Joints

GRADE %	14	15	16	18	20	22	24	
0.05	1.305	1.566	1.863	2.549	3.366	4.341	5.477	1.4
.10	1.899	2.209	2.628	3.596	4.734	6.125	7.726	
.15	2.254	2.710	3.219	4.406	5.816	7.501	9.462	
.20	2.604	3.125	3.717	5.086	6.718	8.664	10.929	3.5
.25	2.912	3.495	4.158	5.689	7.514	9.691	12.225	
.30	3.192	3.831	4.557	6.235	8.236	10.621	13.399	
.35	3.448	4.138	4.923	6.736	8.897	11.474	14.475	
.40	3.681	4.418	5.255	7.191	9.498	12.249	15.453	5.0
.45	3.908	4.691	5.579	7.635	10.084	13.005	16.407	
.50	4.118	4.942	5.879	8.044	10.625	13.703	17.287	
.55	4.322	5.187	6.170	8.443	11.151	14.381	18.143	6.0
.60	4.514	5.418	6.444	8.818	11.647	15.020	18.949	
.65	4.695	5.634	6.702	9.171	12.113	15.679	19.707	
.70	4.875	5.851	6.960	9.524	12.579	16.222	20.465	
.75	5.044	6.054	7.201	9.854	13.015	16.784	21.174	
.80	5.207	6.250	7.434	10.172	13.436	17.327	21.859	7.0
.85	5.370	6.445	7.667	10.491	13.856	17.870	22.544	
.90	5.528	6.634	7.891	10.789	14.262	18.393	23.204	
.95	5.679	6.816	8.107	11.094	14.653	18.097	23.840	
1.00	5.825	6.990	8.315	11.378	15.029	19.382	24.450	
1.50	7.135	8.563	10.186	13.938	18.410	23.742	29.952	
2.00	8.236	9.885	11.758	16.089	21.250	27.406	34.573	

SUBSURFACE DRAIN CAPACITY
CFS

Table II
n-0.013

Clay or Concrete Tile
Normal Installation
Conditions

GRADE %	DIAMETER-INCHES 3	4	5	6	8	10	12	VEL. FT.SEC
0.05			.077	.126	.271	.490	.798	1.4
.10	.028	.059	.109	.177	.382	.691	1.126	
.15	.034	.0.73	.133	.217	.468	.847	1.379	
.20	.044	.084	.154	.251	.540	.978	1.593	
.25	.044	.094	.172	.280	.605	1.094	1.782	
.30	.048	.103	.189	.307	.663	1.199	1.953	
.35	0.52	.111	.204	.332	.716	1.295	2.110	
.40	.056	.119	.218	.355	.764	1.383	2.253	
.45	.059	.126	.231	.376	.811	1.468	2.392	
.50	.062	.133	.244	.397	.851	1.547	2.520	
.55	.065	.139	.256	.416	.897	1.624	2.645	3.5
.60	.068	.145	.267	.435	.937	1.696	2.762	
.65	.071	.151	.278	.452	.975	1.764	2.873	
.70	.074	.157	.288	.470	1.012	1.832	2.983	
.75	.076	.162	2.98	.486	1.047	1.895	3.087	
.80	.079	.168	.308	.502	1.081	1.956	3.186	
.85	.081	.173	.318	.517	1.115	2.018	3.286	
.90	.083	.178	.327	.532	.1.147	2.077	3.382	
.95	.086	.183	.336	.547	1.179	2.134	3.475	
1.00	.088	.188	.345	.561	1.209	2.188	3.564	5.0
1.50	.108	.230	.422	.687	1.481	2.681	4.366	6.0
2.00	.124	.265	.487	.793	1.710	3.094	5.040	

SUBSURFACE DRAIN CAPACITY
CFS

Table II
n-0.013

Clay or Concrete Tile
Normal Installation
Conditions

GRADE %	14	15	16	18	20	22	24	
								1.4
0.05	1.204	1.445	1.719	2.353	3.107	4.001	5.056	
.10	1.699	2.039	2.425	3.319	4.384	5.653	7.132	
.15	2.081	2.497	2.970	4.065	5.369	6.924	8.735	
.20	2.403	2.884	3.431	4.695	6.201	7.997	10.089	3.5
.25	2.688	3.226	3.837	5.252	6.936	8.945	11.285	
.30	2.946	3.536	4.206	5.756	7.602	9.804	12.368	
.35	3.183	3.820	4.544	6.218	8.213	10.591	13.361	
.40	3.398	4.078	4.851	6.638	8.768	11.307	14.264	
.45	3.608	4.330	5.150	7.048	9.309	12.005	15.144	5.0
.50	3.801	4.562	5.426	7.426	9.808	12.649	15.597	
.55	3.989	4.788	5.695	7.793	10.294	13.275	16.747	
.60	4.167	5.001	5.949	8.145	10.751	13.865	17.492	
.65	4.334	5.201	6.186	8.465	11.181	14.420	18.191	6.0
.70	4.500	5.401	6.424	8.791	11.611	14.975	18.891	
.75	4.656	5.580	6.647	9.096	12.014	15.493	19.546	
.80	4.807	5.769	6.862	9.390	12.402	15.994	20.178	
.85	4.956	5.949	7.077	9.684	12.791	16.495	20.810	
.90	5.102	6.124	7.284	9.967	13.165	16.978	21.419	7.0
.95	5.242	6.291	7.484	10.240	13.526	17.443	22.006	
1.00	5.377	6.453	7.675	10.503	13.873	17.890	22.570	
1.50	6.586	7.905	9.402	12.866	16.994	21.916	27.648	
2.00	7.602	9.124	10.853	14.851	19.616	25.297	31.914	

SUBSURFACE DRAIN CAPACITY
CFS

Table II
n-0.014

Clay or Concrete Tile
Normal Installation
Conditions

GRADE %	DIAMETER-INCHES 3	4	5	6	8	10	12	VEL. FT/SEC
0.05			.072	.127	.251	.455	.741	
.10	.026	.055	.101	.165	.355	.642	1.046	1.4
.15	.032	.067	.124	.201	.435	.786	1.281	
.20	.037	.079	.143	.233	.502	.908	1.479	
.25	.041	.087	.160	.260	.561	1.016	1.655	
.20	.045	.095	.175	.285	.615	1.114	1.814	
.25	.041	.087	.160	.260	.561	1.016	1.655	
.30	.045	.095	.175	.285	.615	1.114	1.814	
.35	.048	.103	.189	.308	.664	1.203	1.959	
.40	.052	.110	.202	.329	.710	1.284	2.092	
.45	.055	.117	.215	.350	.735	1.363	2.221	
.50	.058	.123	.226	.368	.793	1.437	2.340	
.55	.061	.129	.237	.387	.832	1.508	2.456	
.60	0.63	.135	.248	.404	.869	1.575	2.565	
.65	.066	.140	.258	.420	.905	1.638	2.668	3.5
.70	.068	.146	.268	.436	.939	1.701	2.770	
.75	.071	.151	.277	.451	.972	1.759	2.866	
.80	.073	.0156	.286	.466	1.004	1.817	2.959	
.85	0.75	.161	.295	.480	1.035	1.873	3.051	
.90	.077	.165	.304	.494	1.065	1.928	3.141	
.95	.080	.170	.312	.508	1.094	1.981	3.227	
1.00	.082	.174	.320	.521	1.122	2.032	3.310	5.0
1.50	.100	.213	.392	.638	1.374	**2.489**	4.054	
2.00	.115	.246	.452	.737	1.587	2.873	4.680	

SUBSURFACE DRAIN CAPACITY
CFS

Table II
n-0.014

Clay or Concrete Tile
Normal Installation
Conditions

GRADE %	14	15	16	18	20	22	24	
								1.4
0.05	1.118	1.342	1.597	2.185	2.886	3.721	4.695	
.10	1.578	1.893	2.252	3.082	4.058	5.250	6.623	
.15	1.932	2.319	2.758	3.775	4.985	6.429	8.111	
.20	2.232	2.678	3.186	4.360	5.758	7.426	9.368	
.25	2.496	2.996	3.564	4.876	6.441	8.306	10.479	3.5
.30	2.736	3.284	3.906	5.345	7.059	9.104	11.485	
.35	2.956	3.547	4.219	5.774	7.626	9.835	12.407	
.40	3.155	3.787	4.504	6.164	8.141	10.499	13.245	
.45	3.350	4.021	4.782	6.544	8.644	11.147	14.063	
.50	3.530	4.236	5.039	6.895	9.107	11.745	14.817	
.55	3.704	4.446	5.288	7.237	9.558	12.327	15.551	5.0
.60	3.869	4.644	5.524	7.558	9.983	12.875	16.242	
.65	4.024	4.829	5.745	7.861	10.383	13.390	16.892	
.70	4.179	5.015	5.965	8.163	10.782	13.905	17.542	
.75	4.324	5.189	6.172	8.446	11.156	14.387	18.150	
.80	4.463	5.357	6.372	8.719	11.516	14.852	18.736	6.0
.85	4.603	5.525	6.571	8.992	11.877	15.317	19.323	
.90	4.738	5.686	6.764	9.255	12.225	15.766	19.889	
.95	4.868	5.842	6.949	9.509	12.560	16.197	20.434	
1.00	4.993	5.992	7.127	9.753	12.882	16.613	20.958	7.0
1.50	6.116	7.340	8.731	11.947	15.780	20.351	25.673	
2.00	7.059	8.473	10.078	13.791	18.215	23.491	29.634	

SUBSURFACE DRAIN CAPACITY
CFS

Table II
n-0.015

Clay or Concrete Tile
Normal Installation
Conditions

GRADE %	DIAMETER-INCHES							VEL. FT/SEC
	3	4	5	6	8			
0.05			.067	.109	.234			
.10		.051	.094	.154	.331			
.15	.029	.063	.116	.188	.405			
.20	.034	.073	.133	.217	.468			1.4
.25	.038	.081	.149	.243	.524			
.30	.042	.089	.164	.266	.574			
.35	.045	.096	.177	.288	.620			
.40	.048	.103	.189	.307	.662			
.45	.051	.109	.200	.326	.703			
.50	.054	.115	.211	.344	.741			
.55	.057	.121	.222	.361	.777			
.60	.059	.126	.231	.377	.812			
.65	.061	.131	.241	.392	.844			
.70	.064	.136	.250	.407	.877			
.75	.066	.141	.259	.421	.907			
.80	.068	.145	.270	.435	.937			
.85	.070	.150	.275	.448	.966			
.90	.072	.154	.283	.461	.994			
.95	.074	.159	.291	.474	1.021			
1.00	.076	.163	.299	.486	1.048			3.5
1.50	.093	.199	.366	.596	1.283			
2.00	.108	.230	.422	.687	1.481			

SUBSURFACE DRAIN CAPACITY
CFS

Table II
n-0.016

Corrugated Plastic Tubing
Poor Installation Condition

GRADE %	DIAMETER-INCHES 3	4	5	6	8			VEL. FT/SEC
0.05				.102	.220			
.10		.048	.088	.144	.310			
.15	.028	.059	.108	.176	.380			
.20	.032	.068	.125	.204	.439			1.4
.25	.036	.076	.140	.228	.491			
.30	.039	.083	.153	.250	.538			
.35	.042	.090	.166	.270	.581			
.40	.045	.096	.177	.288	.621			
.45	.048	.102	.188	.306	.659			
.50	.051	.108	.198	.322	.694			
.55	.053	.113	.208	.338	.728			
.60	.055	.118	.217	.353	.760			
.65	.058	.123	.226	.367	.791			
.70	.060	.128	.234	.381	.821			
.75	.062	.132	.242	.395	.850			
.80	.064	.136	.250	.407	.878			
.85	.066	.141	.258	.420	.905			
.90	.068	.145	.266	.433	.931			
.95	.070	.149	.273	.444	.957			
1.00	.071	.152	.280	.456	.982			3.5
1.50	.088	.187	.343	.558	1.202			
2.00	.101	.216	.396	.649	1.388			

SUBSURFACE DRAIN CAPACITY
CFS

Table II
n-0.017

Corrugated Plastic Tubing
Normal Installation
Condition

GRADE %	10	12	15					
0.05	.375	.609	1.105					
.10	.529	.861	1.559	1.4				
.15	.648	1.055	1.910					
.20	.748	1.218	2.206					
.25	.837	1.362	2.467					
.30	.917	1.492	2.704					
.35	.991	1.612	2.921					
.40	1.058	1.723	3.119					
.45	1.123	1.827	3.311					
.50	1.183	1.926	3.489					
.55	1.242	2.020	3.661					
.60	1.297	2.110	3.824					
.65	1.349	2.196	3.977					
.70	1.401	2.279	4.130					
.75	1.449	2.359	4.273	3.5				
.80	1.496	2.436	4.411					
.85	1.543	2.511	4.550					
.90	1.588	2.584	4.683					
.95	1.632	2.655	4.811					
1.00	1.673	2.724	4.934					
1.50	2.050	3.336	5.045	5.0				
2.00	2.366	3.852	6.977					

SUBSURFACE DRAIN CAPACITY
CFS

Table II
n-0.018

Corrugated Plastic Tubing Poor Installation Condition

GRADE %	10	12	15					
0.05	.354	.577	1.044					
.10	.499	.813	1.473	1.4				
.15	.612	.996	1.804					
.20	.706	1.151	2.083					
.25	.790	1.287	2.330					
.30	.866	1.390	2.554					
.35	.936	1.524	2.759					
.40	.999	1.627	2.945					
.45	1.060	1.727	3.127					
.50	1.117	1.820	3.295					
.55	1.172	1.910	3.458					
.60	1.225	1.995	3.612					
.65	1.274	2.075	3.756					
.70	1.323	2.155	3.900					
.75	1.369	2.229	4.036					
.80	1.413	2.301	4.166	3.5				
.85	1.457	2.373	4.297					
.90	1.500	2.443	4.423					
.95	1.541	2.510	4.544					
1.00	1.580	2.574	4.660					
1.50	1.936	3.153	5.849	5.0				
2.00	2.235	3.640	6.590					

SUBSURFACE DRAIN CAPACITY
CFS

Table II A

GRADE %	DIAMETER - INCHES			VEL. FT/SEC
	18	21	24	
0.05	1.53	2.19	2.98	
0.10	2.16	3.09	4.22	
0.15	2.64	3.79	5.17	1.4
0.20	3.05	4.38	5.97	
0.25	3.41	4.89	6.67	
0.30	3.74	5.36	7.31	
0.35	4.04	5.79	7.90	
0.40	4.32	6.19	8.44	
0.45	4.58	6.56	8.95	
0.50	4.83	6.92	9.44	
0.55	5.06	7.26	9.90	
0.60	5.29	7.58	10.34	
0.65	5.50	7.89	10.76	
0.70	5.71	8.19	11.17	3.5
0.75	5.91	8.47	11.56	
0.80	6.11	8.75	11.94	
0.85	6.29	9.02	12.31	
0.90	6.47	9.28	12.66	
0.95	6.65	9.54	13.01	
1.00	6.83	9.79	13.35	
1.50	8.36	11.98	16.35	5.0
2.00	9.65	13.84	18.88	6.0

"n" Values

18" – n = 0.020

21" – n = 0.021

24" – n = 0.022

CAPACITY OF CORRUGATED METAL PIPE CULVERTS

OUTLET CONTROL – FULL FLOW – WITHOUT HEADWALLS

CIRCULAR FORMULA:

$$H = \left[\frac{2.52\ (1 + K_e)}{D^4} + \frac{466.2\ n^2\ L}{D^{16/3}} \right] \left[\frac{Q}{10} \right]^2$$

Using: $K_e = 0.9$ and $n = 0.024$

DIAMETER INCHES	Length	Cubic Feet per Second																
		Head on Pipe - Feet																
		0.1	0.2	0.3	0.4	0.5	0.6	0.8	1.0	1.2	1.4	1.6	1.8	2.0	2.5	3.0	3.5	4.0
12	20 Feet	1.0	1.4	1.7	2.0	2.2	2.4	2.8	3.1	3.4	3.7	4.0	4.2	4.4	5.0	5.4	5.8	6.2
15		1.7	2.4	2.9	3.4	3.8	5.1	5.8	5.3	5.8	6.3	6.8	7.1	7.5	8.4	9.2	9.9	11
18		2.6	3.6	4.4	5.2	5.7	6.2	7.2	8.0	8.8	9.5	10	11	11	13	14	15	16
21		3.6	5.1	6.2	7.2	8.0	8.8	10	11	12	13	14	15	16	18	19	21	22
24		4.9	6.8	8.4	9.6	11	12	14	15	17	18	19	20	21	24	26	28	30
27		6.2	8.8	11	12	14	15	18	20	21	23	25	26	28	31	34	36	39
30		7.8	11	14	16	17	19	22	25	27	29	32	33	35	39	42	46	49
36		12	16	20	23	26	28	33	37	40	43	46	49	52	57	63	68	72
42		16	23	28	32	36	39	45	51	55	60	64	68	71	79	86	93	100
48		22	30	37	43	48	52	60	68	74	80	85	90	94	106	117	125	134
54		28	39	48	55	61	67	78	87	94	102	109	116	121	136	149	160	171
60		34	48	59	68	76	83	96	107	118	126	134	142	150	167	182	197	210
Velocity		4						5		6			7		8		9	10
12	40 Feet	0.8	1.1	1.4	1.6	1.8	2.0	2.3	2.5	2.8	3.0	3.2	3.4	3.6	4.0	4.4	4.8	5.1
15		1.4	1.9	2.4	2.7	3.1	3.4	3.9	4.3	4.8	5.2	5.5	5.9	6.2	6.9	7.6	8.2	8.8
18		2.1	3.0	3.7	4.3	4.8	5.2	6.0	6.8	7.4	8.0	8.6	9.0	9.6	11	12	13	14
21		3.0	4.3	5.3	6.1	6.8	7.4	8.6	9.6	11	12	12	13	14	15	17	18	19
24		4.2	5.9	7.2	8.4	9.4	10	12	13	15	16	17	18	19	21	23	25	27
27		5.5	7.8	9.6	11	12	14	16	17	19	21	22	23	25	28	30	33	35
30		7.0	9.8	12	14	16	17	20	22	24	26	28	30	31	35	38	42	44
36		10	15	18	21	24	26	30	33	36	39	42	45	47	53	58	62	66
42		15	21	26	30	33	36	42	47	51	55	59	62	66	74	80	88	93
48		20	28	35	40	45	49	56	63	69	74	80	84	89	99	109	118	127
54		26	36	45	51	57	63	72	81	89	96	103	109	115	128	140	152	163
60		32	45	55	64	72	78	90	100	110	120	128	136	143	160	175	190	202
Velocity		4		5					6				7	8			9	10
12	60 Feet	0.7	1.0	1.2	1.4	1.6	1.7	2.0	2.2	2.4	2.6	2.8	2.9	3.1	3.5	3.8	4.1	4.4
15		1.2	1.7	2.1	2.4	2.7	3.0	3.4	3.8	4.2	4.5	4.8	5.1	5.4	6.0	6.6	7.1	7.6
18		1.9	2.7	3.3	3.8	4.2	4.6	5.3	5.9	6.5	7.0	7.5	8.0	8.4	9.3	10	11	12
21		2.7	3.9	4.8	5.5	6.1	6.6	7.7	8.7	9.5	10	11	12	12	14	15	16	17
24		3.8	5.4	6.6	7.6	8.4	9.2	11	12	13	14	15	16	17	19	21	22	24
27		5.0	7.1	8.7	10	11	12	14	16	17	19	20	21	22	25	27	29	31
30		6.4	9.0	11	13	14	16	18	20	22	24	25	27	28	32	35	37	40
36		9.7	14	17	19	22	24	27	31	33	36	38	41	43	48	52	56	60
42		14	19	24	28	31	34	39	44	48	51	55	58	61	68	74	80	86
48		19	27	32	38	42	46	53	59	64	69	74	78	82	92	100	108	116
54		24	34	42	48	54	59	68	77	83	90	96	102	108	120	131	142	152
60		31	43	53	61	68	74	86	97	105	113	120	128	135	150	166	178	190
Velocity		4			5			6				7		8	9			

CAPACITY OF CORRUGATED METAL PIPE CULVERTS

OUTLET CONTROL – FULL FLOW – WITHOUT HEADWALLS

ARCH

$$H = \left[\frac{2.460(l + k_e)}{(BD)^2} + \frac{350.7 n^2 L}{(BD)^2 D^{4/3}} \right] \cdots \left[\frac{Q}{10} \right]^2$$

$$\eta = 0.024 \ldots k_e = 0.9$$

SPAN AND RISE INCHES	Length																	
18x11	3.220 Feet								4.6	5.0	5.4				7.2	7.9		9.1
22x13									6.9	7.6				9.7	11		13	14
25x16								9.1	10	11			14	14		18	19	
29x18								12	14			17	18	19		24		
36x22								19	22			27	29	31		37		
43x27								29				41	44		52	57		66
50x31								39				55	58		69	76		88
58x36							48	56			74	78			98		117	125
65x40							60	70			94	100			125		149	159
72x44							74	84			110	120			150		179	190
Velocity								4		5		6		7			8	9
18x11	40 Feet										4.5	4.8	5.0	5.3			7.0	7.6
22x13											6.8	7.2	7.6	8.0		10	11	
25x16										9.4	10	11			14	15		
29x18									12	13	14				19			24
36x22									19	21				27	30		36	39
43x27								27	30				40	42			55	
50x31								35	40				53	56			74	
58x36								51	57			72	76			99		115
65x40								66				92	98			128		149
72x44								80				110	120			155		180
Velocity								4	5			6		7		8	9	10
18x11	60 Feet													4.6	5.1			
22x13		1.6	2.2	2.7	3.2	3.6	3.9	4.5	5.0	5.5	6.0	6.4	6.8	7.0	8.0	8.6	9.4	10
25x16		2.4	3.4	4.2	4.8	5.4	5.9	6.8	7.6	8.4	9.0	9.6	11	11	12	13	14	16
29x18		3.3	4.7	5.8	6.7	7.4	8.2	9.4	11	12	13	14	14	15	17	18	20	22
36x22		5.5	7.7	9.4	11	12	13	15	17	19	21	22	23	25	27	30	32	35
43x27		8.6	12	15	17	19	21	24	27	30	32	35	36	38	43	47	51	55
50x31		11	16	20	23	26	28	33	36	40	43	46	49	52	57	63	68	75
58x36		17	24	30	34	38	42	49	55	60	64	68	72	76	86	94	100	103
65x40		22	31	39	44	50	55	63	70	76	84	88	94	100	110	120	130	140
72x44		26	37	46	53	59	65	75	84	92	100	105	110	120	130	145	159	169
Velocity								4		5		6			7	8	9	

CAPACITY OF CONCRETE PIPE CULVERTS

OUTLET CONTROL – FULL FLOW – WITHOUT HEADWALLS

SOCKET END UPSTREAM

$$H = \left[\frac{2.820(1-k_e)}{(D)^4} + \frac{486.2n^2L}{D^{16/3}}\right] \ldots \left[\frac{Q}{10}\right]^2$$

$$\eta = 0.012 \ldots k_e = 0.2$$

DIAMETER INCHES	Length	CUBIC FEET PER SECOND																							
		Head on Head on Pipe - Feet																							
		0.5			1.0			1.5			2.0			2.5			3.0			3.5			4.0		
12	20 Feet						5						7											10	
18				8			12						16								22			23	
24				15			21			26			30								40			42	
30				24			34			41			48						59		63			68	
36				35						60			70						85		92			99	
42										83			96						117		127			135	
48										109									154		166			178	
54										138									196		212			226	
60										172									243		262			282	
Velocity		4	5		6	7			8			10					12								
12	30 Feet									5					7										
18				8			11						16		17						21			22	
24				14			20						29								38			41	
30				23			33			40			46								61			66	
36				34			48			59			68								90			96	
42				47			66			81			94						115		124			133	
48				62						107			124						152		164			175	
54				79						137			158						193		209			223	
60				98						170									240		259			277	
Velocity		4			5	6	7			8			10					12							
12	40 Feet									5					7			7							
18													15		17									21	
24				14			20						28		31						37			40	
30				23			32						45								60			64	
36				33			47			58			67								88			94	
42				46			65			80			92								122			130	
48				61			86			106			122								161			172	
54				78			110			135			156						191		206			220	
60				97			137			168			194						237		256			274	
Velocity		4			5	6		7	8						10		12								
12	50 Feet									5					6			7			7				
18				7			10			12			14		16			17			19			20	
24				14			19			23			27		30			33			36			38	
30				22			31			38			44		49			54			58			62	
36				33			46			57			65		73			80			86			92	
42				45			64			78			91		101			111			120			128	
48				60			85			104			120		134			147			159			170	
54				77			109			133			154		172			188			203			217	
60				96			135			166			191		214			234			253			270	
Velocity		4			5	6		7	8						10					12					

CAPACITY OF CULVERTS
INLET CONTROL – WITHOUT HEADWALLS

CIRCULAR CORRUGATED METAL PIPE

Diameter Inches	Cubic Feet Per Second												
	Head on Pipe Inlet - Feet												
	1.0	1.5	2.0	2.5	3.0	3.5	4.0	4.5	5.0	5.5	6.0	6.5	7.0
12	2.0	3.2	4.1	4.7	5.3	5.8	6.3	6.7	7.2	7.5	8.0		
15	2.6	4.5	6.0	7.2	8.0	8.9	9.5	10	11	11	12	12	13
18	3.1	5.5	8.0	9.8	11	12	13.	14	15	16	17	18	18
21	3.4	6.8	10	13	15	17	18	19	20	22	23	24	25
24	3.8	7.5	11	15	18	21	23	25	26	28	29	31	32
27		8.5	13	18	22	25	28	31	33	35	37	39	40
30		9.0	15	20	26	30	33	37	40	42	45	47	50
36		10	17	24	31	38	45	50	55	60	64	67	70
42			19	28	37	46	55	63	70	76	81	86	91
48			21	32	42	54	62	77	86	92	101	110	115
54				33	47	60	73	86	99	111	122	131	140
60				37	51	66	82	96	110	130	142	155	165

CIRCULAR CONCRETE PIPE – SOCKET END UPSTREAM

Diameter Inches	Cubic Feet Per Second												
	Head on Pipe Inlet - Feet												
	1.0	1.5	2.0	2.5	3.0	3.5	4.0	4.5	5.0	5.5	6.0	6.5	7.0
12	2.5	4.0	5.2	6.0	6.8	7.4	8.0	8.6	9.1	9.6	10		
15	3.1	5.6	7.5	9.0	10	11	12	13	14	15	16	16	17
18	3.5	7.0	9.0	12	14	15	17	18	20	21	22	23	24
21	4.0	8.0	12	15	18	20	22	24	26	27	29	30	32
24	4.3	9.1	14	19	22	26	29	31	33	35	38	40	42
27		9.8	16	22	27	32	35	38	40	43	46	48	52
30		10	17	25	32	37	42	46	50	53	56	59	62
36		12	20	29	38	47	55	62	68	72	79	82	85
42			22	33	44	57	67	76	85	93	100	107	113
48			24	38	50	65	80	92	105	115	125	135	145
54				38	55	73	90	105	120	135	150	162	175
60				42	58	78	95	115	135	155	172	190	202

PIPE ARCH – CORRUGATED METAL PIPE

Diameter Inches	Cubic Feet Per Second												
	Head on Pipe Inlet - Feet												
	1.0	1.5	2.0	2.5	3.0	3.5	4.0	4.5	5.0	5.5	6.0	6.5	7.0
18x11	3.2	4.8	6.0	6.8	7.5	8.2							
22x13	4.0	6.5	8.0	9.5	11	12	13						
25x16	4.7	8.0	11	13	15	16	17	18					
29x18	5.5	10	13	16	19	21	22	24	26	27	28		
36x22	6.7	12	18	22	26	30	33	35	38	40	43	45	47
43x27	7.8	15	22	30	37	42	46	51	55	58	61	65	67
50x31	9.4	17	26	36	45	53	59	66	71	76	80	84	88
58x36		20	31	43	55	65	75	83	90	98	105	111	116
65x40		21	34	47	62	75	87	98	108	118	125	133	141
72x44		24	38	53	70	85	100	115	128	138	150	160	170

ACRES DRAINED PER QUANTITY OF FLOW

QUANTITY CFS	ACRES				QUANTITY CFS	ACRES			
	A	B	C	D		A	B	C	D
1	3	7	12	18	41	136	254	593	1182
2	6	13	21	31	42	140	260	621	1220
3	10	19	30	44	43	143	267	649	1260
4	13	25	39	57	44	147	274	677	1300
5	16	31	48	70	45	150	281	705	1340
6	20	37	57	85	46	154	288	733	1380
7	23	43	66	100	47	157	295	761	1420
8	26	50	75	126	48	161	302	789	1460
9	30	55	84	132	49	164	309	817	1500
10	33	60	93	148	50	168	316	845	1540
11	36	66	102	164	52	175	331	900	1610
12	40	73	111	180	54	182	347	955	1680
13	43	79	120	208	56	190	362	1010	1750
14	46	85	130	226	58	197	378	1065	1820
15	50	91	141	245	60	204	393	1130	1890
16	53	97	152	269	62	211	413	1176	1960
17	56	103	163	293	64	218	433	1232	2030
18	60	109	175	317	66	225	453	1288	2100
19	63	115	187	341	68	232	473	1337	2170
20	66	120	198	365	70	239	492	1386	2240
21	70	127	209	401	72	246	519	1435	2317
22	73	131	223	437	74	253	545	1484	2394
23	76	139	237	474	76	260	571	1533	2471
24	80	145	251	510	78	267	598	1581	2548
25	83	150	265	550	90	284	725	173-	2624
26	86	156	280	50-	92	291	750	1679	2701
27	90	162	283	630	84	288	693	1728	2778
28	93	169	307	670	86	295	727	1780	2854
29	97	175	321	710	88	302	761	1831	2931
30	100	182	335	750	90	310	795	1883	3008
31	103	188	356	790	92	318	830	1934	3085
32	107	195	377	830	94	326	864	1986	3162
33	110	201	398	870	96	334	899	2037	3238
34	113	208	419	910	98	342	933	2089	3315
35	117	214	440	949	100	350	968	2140	3392
36	120	220	465	988	105	373	1052	2269	3597
37	123	227	490	1026	110	397	1137	2398	3802
38	127	234	515	1065	115	420	1223	2526	4006
39	129	240	540	1104	120	443	1307	2655	4211
40	133	247	565	1143	125	467	1390	2784	4416

ACRES DRAINED PER QUANTITY OF FLOW

QUANTITY CFS	ACRES				QUANTITY CFS	ACRES			
	A	B	C	D		A	B	C	D
130	490	1473	2918	4621	280	1786	4429	7360	11360
135	518	1556	3053	4826	285	1844	4540	7520	11600
140	546	1639	3187	5030	290	1903	4646	7680	11840
145	573	1722	3322	5235	295	1961	4755	7840	12080
150	601	1805	3456	5440	300	2019	4864	8000	12320
155	629	1888	3592	5664	305	2077	4992	8160	12576
160	657	1980	3738	5888	310	2135	5120	8320	12832
165	701	2072	3878	6112	315	2193	5248	8480	13088
170	745	2165	4019	6336	320	2252	5376	8640	13340
175	788	2258	4160	6560	325	2310	5504	8800	13600
180	832	2350	4310	6784	330	2368	5632	8960	13856
185	875	2442	4442	7008	335	2432	5760	9120	14112
190	917	2535	4523	7232	340	2496	5888	9280	14368
195	960	2628	4724	7456	345	2560	6016	9440	14624
200	1004	2720	4864	7680	350	2624	6144	9600	14880
205	1048	2826	5019	7904	355	2688	6266	9766	15152
210	1092	2931	5172	8128	360	2752	6387	9933	15424
215	1136	3037	5326	8352	365	2816	6509	10097	15696
220	1180	3142	5479	8576	370	2880	6630	10266	15968
225	1224	3248	5633	8800	375	2955	6752	10432	16240
230	1268	3354	5787	9024	380	3029	6874	10598	16512
235	1312	3459	5940	9248	385	3104	6995	10765	16784
240	1364	3565	6094	9472	390	3179	7117	10932	17056
245	1416	3670	6247	9690	395	3253	7238	11098	17328
250	1468	3776	6400	9920	400	3328	7360	11264	17600
255	1520	3884	6560	10160					
260	1572	3994	6720	10400					
265	1624	4102	6880	10640					
270	1676	4211	7040	10880					
275	1728	4320	7200	11120					

Table based on drainage curves developed by John Sutton, ASAE Technical Presentation, 1938.

A – Good protection from overflow (not maximum flood runoff).
B – Excellent agricultural drainage.
C – Good agricultural drainage.
D – Fair agricultural drainage.

PROCEDURE FOR DESIGN OF DRAINAGE DITCHES AT CULVERTS

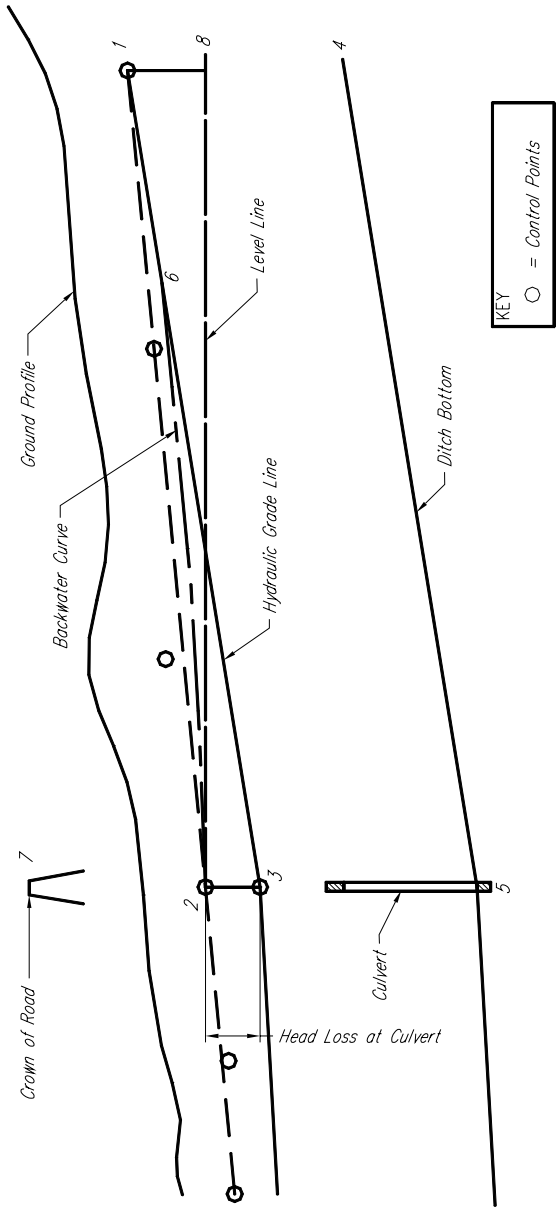

a – Set "control points" 1,2,etc. as though no culvert is to be installed. Make distance 2 to 8 large enough so that 1 to 8 is two or more times greater than 2 to 3. Point 1 is approximately at limit of backwater curve which may be established by standard methods of computing backwater curves.

b – Normal hydraulic gradient would be line 1 to 2.

c – Compute head loss at culvert 2 to 3; measure down from upper "control point" 2 at culvert and set lower "control point" 3.

d – Draw hydraulic gradient for ditch section above culvert from "control point" at 1 to lower "control point" at 3.

e – Compute ditch section required based on drainage flow and hydraulic grade line 1 to 3 and set ditch bottom 4 to 5.

f – Culvert will cause heading-up along typical backwater curve 2 to 6; generally close to line 1 to 2, provided 1 is far enough upstream.

g – Check flood flows over crown of road depending on elevation at point 7.

Figure 1
Reference: Chapter 6 NEH Section 16

Kd VALUES

TRAPEZOIDAL SECTION DESIGN

Drainage Main or Lateral

Side Slopes Z-1 ½ : 1, 2 : 1, 3 : 1 n – 0.025, 0.040

Bottom Widths Ft. 3, 4, 5, 6, 8, 10, 12, 14

Drainage Field Ditch

Side Slopes Z-4 : 1, 8 : 1, 10 : 1, 12 : 1, 14 : 1, 16 : 1, 18 : 1 n – 0.040
Bottom Widths Ft. 4, 5, 6, 7, 8, 10

MANNINGS FORMULA

$$Q = \frac{1.486}{n} \quad AR^{2/3} \quad S^{1/2} \qquad Q = AV \qquad V = \frac{Q}{A}$$

$$Kd = \frac{1.486}{n} \quad AR^{2/3} \qquad Q = Kd\ S^{1/2} \qquad Kd = \frac{Q}{S^{1/2}}$$

Example – Drainage Main or Lateral

Q = 146 cfs S = 0.005 Z = 2 : 1 n = 0.040

$$Kd = \frac{Q}{S^{1/2}} = \frac{146}{0.0707} = 2065$$

Possible Solutions from Tables

Kd	Depth	Bottom Width	Area	Velocity
2108	3.6	3	36.7	4.0
2101	3.4	4	36.7	4.0
2072	3.2	5	36.5	4.0

Example – Drainage Field Ditch

Q = 4 cfs s = 0.0005 Z = 10:1 n = 0.040

$$Kd = \frac{Q}{S^{1/2}} = \frac{4}{0.0224} = 179$$

Possible Solution from Tables

Kd	Depth	Bottom Width	Area	Velocity
191	0.75	4	8.63	0.46
180	0.7	5	8.4	0.48

Note: Minimum depth 0.75, according to Technical Guide.

Kd Values

Trapezoidal Section Design
Drainage Main or Laterial

Side Slope – 1 ½:1
n – 0.025

DEPTH FEET	BOTTOM WIDTH FEET							
	3	4	5	6	8	10	12	14
0.4	40	53	66	78	104	130	157	182
0.6	82	107	131	157	208	258	309	357
0.8	138	176	216	256	338	419	499	581
1.0	206	262	322	376	499	608	709	846
1.2	293	368	445	523	675	835	992	1149
1.4	392	488	587	688	885	1092	1294	1496
1.6	510	629	749	872	1123	1376	1630	1885
1.8	642	786	936	1080	1384	1691	1995	2310
2.0	797	965	1138	1307	1675	2034	2398	2764
2.2	966	1166	1365	1573	1987	2410	2838	3274
2.4	1155	1382	1614	1850	2330	2818	3306	3798
2.6	1366	1629	1890	2154	2701	3250	3810	4376
2.8	1598	1890	2189	2483	3104	3726	4349	4982
3.0	1853	2176	2507	2843	3526	4226	4931	5648
3.2	2131	2486	2859	3227	3990	4760	5534	6336
3.4	2422	2827	3229	3643	4477	5331	6194	7053
3.6	2749	3182	3626	4077	4995	5922	6877	7829
3.8	3099	3570	4051	4550	5546	6568	7595	8627
4.0	3475	3986	4517	5042	6131	7227	8358	9472
4.2	3865	4427	4998	5565	6733	7931	9142	10353
4.4	4617	4899	5512	6120	7386	6666	9982	11281
4.6	4757	5400	6059	6718	8075	9440	10848	12251
4.8	5229	5918	6630	7341	8778	10251	11744	13270
5.0	5749	6488	7222	7992	9541	11104	12715	14333
5.2	6278	7072	7861	8675	10313	11964	13702	15421
5.4	6859	7678	8531	9390	11075	12932	14730	16571
5.6	7450	8338	9237	10147	12005	13872	15801	17738
5.8	8091	9029	9974	10936	12891	14835	16920	18954

Kd Values

Trapezoidal Section Design
Drainage Main or Laterial

Side Slope – 1 ½:1
n – 0.025

DEPTH FEET	BOTTOM WIDTH FEET							
	3	4	5	6	8	10	12	14
6.0	8744	9731	10729	11763	13818	15917	18080	20219
6.2	9461	10488	11541	12624	14939	17012	19248	21526
6.4	10171	11258	12386	13525	15787	18125	20501	22885
6.6	10946	12090	13240	14434	16861	19315	21797	24293
6.8	11733	12953	14162	15408	17947	20501	23096	25746
7.0	12576	13829	15123	16422	19073	21742	24491	27248
7.2	13430	14739	16084	17450	20243	23029	25888	28805
7.4	14352	15715	17123	18541	21448	24390	27363	30405
7.6	15280	16730	18203	19675	22672	25758	28858	32013
7.8	16248	17754	19280	20819	23966	27184	30437	33720
8.0	17275	18852	20435	22032	25307	28643	32024	35421
8.2	18433	19948	21738	21738	23306	26636	30150	37225
8.4	19519	21126	22985	24555	28120	31709	35338	39046
8.6	20679	22314	24238	25902	29593	33315	37117	40963
8.8	21845	23571	25571	27296	31117	34962	38898	42867
9.0	22973	24837	26909	28688	32642	36659	40731	44883
9.2	24336	26136	28330	30166	34250	38406	42622	46915
9.4	25625	27528	29754	31693	35909	40208	44550	48986
9.6	27118	28915	31266	33222	37630	42062	46594	51162
9.8	28412	30392	32779	34957	39229	43955	49499	53347
10.0	29787	31870	34336	36448	41136	45902	50730	55918

Kd Values

Trapezoidal Section Design
Drainage Main or Laterial

Side Slope – 1 ½:1
n – 0.040

DEPTH FEET	BOTTOM WIDTH FEET							
	3	4	5	6	8	10	12	14
0.4	25	33	41	49	65	81	98	114
0.6	51	67	82	98	130	161	193	223
0.8	86	110	135	160	211	262	312	363
1.0	129	164	201	235	312	380	453	529
1.2	183	230	276	327	422	522	620	718
1.4	245	305	367	430	553	683	809	935
1.6	319	393	468	545	702	860	1019	1178
1.8	401	491	585	675	865	1057	1247	1444
2.0	498	603	711	817	1047	1271	1499	1728
2.2	604	729	853	983	1242	1506	1774	2046
2.4	722	864	1009	1156	1456	1761	2066	2374
2.6	854	1018	1181	1346	1688	2031	2381	2735
2.8	999	1181	1368	1552	1940	2329	2718	3114
3.0	1158	1360	1567	1777	2204	2641	3082	3530
3.2	1332	1554	1787	2017	2494	2975	3459	3960
3.4	1514	1769	2018	2277	2798	3332	3871	4408
3.6	1718	1989	2266	2548	3122	3701	4298	4893
3.8	1937	2231	2532	2844	3466	4105	4747	5392
4.0	2172	2491	2823	3151	3832	4517	5224	5920
4.2	2416	2767	3124	3478	4208	4957	5714	6471
4.4	2686	3062	3445	3825	4616	5416	6239	7051
4.6	2973	3375	3787	4199	5047	5900	6780	7657
4.8	3268	3699	4144	4588	5486	6407	7340	8294
5.0	3593	4050	4514	4995	5963	6940	7947	8958
5.2	3924	4420	4913	5422	6446	7478	8564	9638
5.4	4287	4799	5336	5869	6922	8083	9206	10357
5.6	4656	5211	5773	6342	7503	8670	9876	11086
5.8	5057	5643	6234	6835	8057	9272	10575	11846

Kd Values

Trapezoidal Section Design
Drainage Main or Laterial

Side Slope – 1 ½:1
n – 0.040

DEPTH FEET	BOTTOM WIDTH FEET							
	3	4	5	6	8	10	12	14
6.0	5465	6082	6706	7352	8636	9948	11300	12637
6.2	5907	6555	7213	7880	9337	10633	12030	13454
6.4	6357	7036	7741	8453	9867	11328	12813	14303
6.6	6841	7556	8275	9021	10538	12072	13623	15183
6.8	7333	8096	8851	9630	11217	12813	14435	16091
7.0	7860	8643	9452	10264	11921	13589	15307	17030
7.2	8394	9212	10054	10906	12652	14393	16180	18003
7.4	8970	9822	10702	11588	13405	15244	17102	19003
7.6	9550	10456	11377	12297	14170	16099	18036	20008
7.8	10155	11096	12050	13012	14979	16990	19023	21075
8.0	10797	11783	12772	13770	15817	17092	20015	22138
8.2	11520	12468	13586	14566	16684	18844	21038	23266
8.4	12199	13024	14366	15347	17575	19818	22086	24404
8.6	12924	13946	15149	16189	18496	20822	23198	25602
8.8	13653	14732	15982	17060	19488	21851	24311	26792
9.0	14358	15523	16818	17930	20401	22912	25457	28052
9.2	15210	16335	17706	18854	21406	24004	26639	29322
9.4	16016	17205	18596	19808	22443	25130	27844	30616
9.6	16949	18072	19541	20764	23519	26289	29121	31976
9.8	17758	18995	20487	21848	24587	27472	30937	33342
10.0	18617	19919	21460	22780	25710	28689	31706	34949

Kd Values

Trapezoidal Section Design
Drainage Main or Laterial

Side Slope – 2:1
n – 0.025

DEPTH FEET	BOTTOM WIDTH FEET							
	3	4	5	6	8	10	12	14
0.4	42	54	67	80	106	131	156	186
0.6	86	112	136	162	213	261	313	365
0.8	149	189	229	266	346	426	508	590
1.0	227	283	341	395	512	634	744	866
1.2	323	400	477	554	707	867	1027	1186
1.4	443	539	637	733	934	1134	1336	1544
1.6	582	699	821	944	1190	1448	1696	1949
1.8	744	885	1034	1179	1478	1786	2088	2402
2.0	923	1096	1267	1445	1802	2162	2512	2891
2.2	1134	1333	1530	1742	2154	2576	2993	3430
2.4	1365	1597	1824	2062	2539	3019	3506	3998
2.6	1630	1888	2147	2416	2962	3514	4064	4632
2.8	1917	2210	2504	2803	3426	4040	4665	5298
3.0	2232	2563	2891	3224	3903	4602	5312	6012
3.2	2587	2958	3315	3682	4448	5248	5992	6779
3.4	2963	3362	3773	4173	5013	5864	6714	7574
3.6	3373	3810	4253	4702	5618	6541	7486	8446
3.8	3814	4294	4784	5274	6261	7283	8306	9342
4.0	4302	4816	5338	5882	6950	8050	9173	10294
4.2	4813	5378	5944	6514	7680	8883	10069	11296
4.4	5360	5965	6576	7206	8458	9746	11037	12349
4.6	5939	6592	7250	7917	9274	10651	12058	13461
4.8	6568	7261	7978	8693	10144	11603	13102	14592
5.0	7229	7989	8728	9491	11053	12613	14202	15813
5.2	7931	8738	9525	10357	11989	13664	15378	17082
5.4	8674	9530	10386	11243	12992	14768	16576	18389
5.6	9482	10362	11264	12171	14054	15926	17838	19779
5.8	10309	11235	12195	13179	15130	17134	19144	21190

Kd Values

Trapezoidal Section Design
Drainage Main or Laterial

Side Slope – 2:1
n – 0.025

DEPTH FEET	BOTTOM WIDTH FEET							
	3	4	5	6	8	10	12	14
6.0	11176	12160	13168	14200	16285	18398	20517	22662
6.2	12094	13152	14216	15270	17464	19680	21931	24187
6.4	13054	14170	15283	16421	18722	21051	23416	25814
6.6	14058	15229	16394	17595	20002	22475	24952	27466
6.8	15110	16334	17562	18814	21373	23914	26552	29184
7.0	16213	17496	18776	20088	22757	25454	28160	30955
7.2	17358	18702	20043	21446	24197	27056	29872	32794
7.4	18563	19963	21398	22827	25734	38667	31651	34685
7.6	19806	21272	22768	24250	27280	30384	33496	36645
7.8	21110	22627	24182	25738	28886	32117	35342	38674
8.0	22461	24046	25664	27274	30595	33950	37307	40714
8.2	23986	25554	27339	28910	32325	35765	39341	42866
8.4	25452	27075	28941	30566	34101	37710	41370	45099
8.6	26974	28653	30599	32278	35992	39738	43526	47384
8.8	28546	30291	32201	34046	37896	41765	45690	49670
9.0	30185	31989	34091	35872	39850	43918	47986	52109
9.2	31876	33734	35925	37762	41882	46079	50338	54606
9.4	33734	35542	37814	39699	44024	48291	52712	57106
9.6	35432	37413	39769	41614	46174	50653	55138	59752
9.8	37293	39344	41781	43842	48376	53003	57707	62456
10.0	39226	41328	43860	45978	50662	55422	60277	65094

Kd Values

Trapezoidal Section Design
Drainage Main or Laterial

Side Slope – 2:1
n – 0.040

DEPTH FEET	BOTTOM WIDTH FEET							
	3	4	5	6	8	10	12	14
0.4	26	34	42	50	66	82	98	116
0.6	54	70	85	101	133	163	196	228
0.8	93	118	143	166	216	266	318	369
1.0	142	177	213	247	320	394	467	541
1.2	202	250	298	346	442	542	642	741
1.4	277	337	398	458	584	709	835	965
1.6	364	437	513	590	744	905	1060	1218
1.8	465	553	646	737	924	1116	1305	1501
2.0	577	685	792	903	1126	1351	1570	1807
2.2	709	833	956	1089	1346	1610	1871	2144
2.4	853	998	1140	1289	1587	1887	2191	2499
2.6	1019	1180	1342	1510	1851	2196	2540	2895
2.8	1198	1381	1565	1752	2141	2525	2916	3311
3.0	1395	1602	1807	2015	2443	2876	3320	3758
3.2	1617	1849	2072	2301	2780	3280	3745	4237
3.4	1852	2101	2358	2608	3133	3665	4196	4734
3.6	2108	2381	2658	2939	3511	4088	4679	5279
3.8	2384	2684	2990	3296	3913	4552	5191	5839
4.0	2689	3010	3336	3676	4344	5031	5733	6434
4.2	3008	3361	3715	4071	4800	5552	6293	7060
4.4	3350	3728	4110	4504	5286	6091	6898	7718
4.6	3715	4122	4531	4948	5796	6657	7536	8413
4.8	4105	4538	4986	5433	6340	7252	8189	9120
5.0	4518	4993	5455	5932	6908	7883	8876	9883
5.2	4957	5461	5953	6473	7493	8540	9611	10676
5.4	5421	5956	6491	7027	8120	9230	10360	11493
5.6	5926	6476	7040	7607	8784	9954	11149	12362
5.8	6443	7022	7622	8237	9456	10709	11965	13244

Kd Values

Trapezoidal Section Design
Drainage Main or Laterial

Side Slope – 2:1
n – 040

DEPTH FEET	BOTTOM WIDTH FEET							
	3	4	5	6	8	10	12	14
6.0	6985	7600	8230	8875	10178	11499	12823	14164
6.2	7559	8220	8885	9544	10915	12300	13707	15117
6.4	8159	8856	9552	10263	11701	13157	14635	16134
6.6	8786	9518	10246	10997	12501	14047	15595	17166
6.8	9444	10209	10976	11759	13358	14946	16595	18240
7.0	10133	10935	11735	12555	14223	15909	17600	19347
7.2	10849	11689	12527	13404	15123	16910	18670	20496
7.4	11602	12477	13374	14267	16084	17917	19782	21678
7.6	12379	13295	14230	15156	17050	18990	20935	22903
7.8	13194	14142	15114	16086	18054	20073	22089	24171
8.0	14038	15029	16040	17046	19122	21219	23317	25446
8.2	14991	15971	17087	18069	20203	22359	24588	26791
8.4	15908	16922	18088	19104	21313	23569	25856	28187
8.6	16859	17908	19124	20174	22495	24836	27204	29615
8.8	17841	18932	20125	21279	23685	26103	28556	31044
9.0	18866	19993	21307	22420	24906	27449	29991	32568
9.2	19923	21084	22453	23601	26176	28799	31461	34129
9.4	21016	22214	23634	24812	27515	30182	32945	35691
9.6	22145	23383	24856	26099	28859	31658	34461	37345
9.8	23308	24590	26113	27401	30235	33127	36067	39035
10.0	24516	25830	27413	28736	31664	34639	37673	40684

Kd Values

Trapezoidal Section Design
Drainage Main or Laterial

Side Slope – 3:1
n – 0.025

DEPTH FEET	BOTTOM WIDTH FEET							
	3	4	5	6	8	10	12	14
0.4	45	58	70	83	109	134	158	186
0.6	96	122	145	171	219	269	318	370
0.8	169	210	247	286	368	446	530	610
1.0	266	322	377	434	549	666	781	893
1.2	351	459	537	614	765	925	1083	1238
1.4	522	632	729	826	1022	1221	1427	1632
1.6	718	837	956	1074	1320	1573	1826	2074
1.8	929	1070	1217	1362	1654	1962	2251	2672
2.0	1176	1334	1516	1691	2032	2390	2754	3115
2.2	1458	1651	1855	2051	2469	2883	3301	3715
2.5	1777	1998	2234	2467	2930	3413	3901	4376
2.6	2136	2389	2657	2917	3450	3994	4544	5098
2.8	2536	2824	3123	3413	4024	4664	5249	5880
3.0	2980	3301	3636	3958	5635	5323	6003	6702
3.2	3468	3829	4197	4632	5312	6074	6840	7618
3.4	4004	4389	4807	5195	6029	6862	7704	8544
3.6	4586	5010	5469	5893	6803	7731	8645	9589
3.8	5218	5683	6181	6646	7637	8638	9656	10826
4.0	5904	6414	6951	7454	8522	9610	10734	11838
4.2	6641	7178	7775	8322	9474	10669	11846	13068
4.4	7433	8016	8655	9250	10493	11765	13062	14334
4.6	8281	8917	9594	10237	11587	12931	14314	15704
4.8	9185	9848	10591	11256	12731	14160	15629	17114
5.0	10150	10870	11655	12370	13904	15454	17059	18640
5.2	11176	11947	12780	13546	15173	16862	18530	20202
5.4	12261	13066	13971	14786	16514	18299	20067	21878
5.6	13413	14277	14912	16067	17930	19813	21675	23590
5.8	14627	15515	16548	17449	19414	21395	23363	25386

Kd Values

Trapezoidal Section Design
Drainage Main or Laterial

Side Slope – 3:1
n – 0.025

DEPTH FEET	BOTTOM WIDTH FEET							
	3	4	5	6	8	10	12	14
6.0	15911	16861	17938	18899	21024	23067	25176	27299
6.2	17262	18274	19411	20416	22595	24800	27030	29254
6.4	18679	19717	20934	21971	24264	26571	28949	31298
6.6	20171	21278	22539	23643	26043	28467	30963	33350
6.8	21730	22861	24218	25386	27906	30448	33054	35678
7.0	23363	24528	25974	27210	29853	32504	35234	37965
7.2	25075	26306	27806	29069	31808	34648	37488	40344
7.4	26858	28165	29716	30997	33914	36867	39834	42816
7.6	28719	30048	32116	33059	36008	39178	42272	45384
7.8	30658	32128	33778	35208	38317	41515	44741	48030
8.0	32682	34112	35932	37376	40670	44008	47350	50776
8.2	34781	36286	38169	39688	43125	45682	50058	53544
8.4	36945	38549	40484	42091	45651	49278	52861	56544
8.6	39335	40840	42892	44509	48205	51936	55746	59570
8.8	41586	43283	45381	47080	50922	54778	58731	62699
9.0	44023	45738	47764	49677	53718	57718	61818	65910
9.2	46553	48350	50637	52440	56534	60758	64922	69248
9.4	49159	50987	53394	55206	59546	63818	68192	72576
9.6	51869	53773	56250	58144	62555	67040	71566	76101
9.8	54655	56578	59192	61182	65728	70390	75050	79736
10.0	57548	59584	62235	64216	69003	73730	78638	83456

Kd Values

Trapezoidal Section Design
Drainage Main or Laterial

Side Slope – 3:1
n – 0.040

DEPTH FEET	BOTTOM WIDTH FEET							
	3	4	5	6	8	10	12	14
0.4	28	36	44	52	68	84	99	116
0.6	60	76	91	107	137	168	199	231
0.8	106	131	154	179	230	279	331	381
1.0	166	201	236	271	343	416	488	558
1.2	219	287	336	384	478	578	677	774
1.4	326	395	456	516	639	763	892	1020
1.6	449	523	598	671	825	983	1141	1296
1.8	581	669	761	851	1034	1226	1407	1670
2.0	735	834	948	1044	1270	1494	1721	1947
2.2	911	1032	1159	1282	1543	1862	2063	2322
2.4	1111	1249	1396	1542	1831	2133	2438	2735
2.6	1335	1493	1661	1823	2156	2496	2840	3186
2.8	1585	1765	1952	2133	2515	2915	3281	3675
3.0	1863	2063	2273	2474	2897	3327	3752	4189
3.2	2168	2393	2623	2895	3320	3796	4275	4761
3.4	2503	2743	3004	3247	3768	4289	4815	5340
3.6	2866	3131	3418	3683	4252	4832	5403	5993
3.8	3261	3552	3863	4154	4773	5399	6035	6766
4.0	3690	4009	4344	4659	5326	6006	6709	7399
4.2	4151	4486	4859	5201	5921	6668	7404	8168
4.4	4646	5010	5409	5781	6558	7353	8164	8959
4.6	5176	5573	5996	6398	7242	8082	8946	9815
4.8	5741	6155	6619	7035	7957	8850	9768	10696
5.0	6344	6794	7284	7731	8690	9659	10662	11650
5.2	6985	7467	7988	8466	9483	10539	11581	12626
5.4	7663	8165	8732	9241	10321	11437	12542	13674
5.6	8383	8923	9320	10042	11206	12383	13547	14744
5.8	9142	9697	10343	10906	12134	13372	14602	15866

Kd Values

Trapezoidal Section Design
Drainage Main or Laterial

Side Slope – 3:1
n – 0.040

DEPTH FEET	BOTTOM WIDTH FEET							
	3	4	5	6	8	10	12	14
6.0	9944	10538	11211	11812	13140	14417	15735	17062
6.2	10789	11421	12132	12760	14122	15500	16894	18284
6.4	11674	12323	13084	13732	15165	16607	18093	19561
6.6	12607	13299	14087	14777	16277	17792	19352	20844
6.8	13581	14288	15136	15866	17441	19030	20659	22299
7.0	14602	15330	16234	17006	18658	20315	22021	23728
7.2	15672	16441	17379	18168	19880	21655	23430	25215
7.4	16786	17603	18573	19373	21196	23042	24896	26760
7.6	17949	18780	20073	20662	22505	24486	26420	28366
7.8	19161	20080	21111	22005	23948	25947	27963	30019
8.0	20426	21320	22458	23360	25419	27505	29594	31735
8.2	21738	22679	23856	24805	26953	29114	31286	33465
8.4	23091	24093	25303	26307	28532	30799	33038	35340
8.6	24522	25525	26808	27818	30128	32460	34841	37231
8.8	25991	27052	28363	29425	31826	34236	36707	39187
9.0	27514	28586	29853	31048	33574	36074	38636	41194
9.2	29096	30219	31648	32775	35334	37947	40576	43280
9.4	30724	31867	33371	34504	37216	39886	42620	45360
9.6	32418	33608	35156	36340	39097	41900	44728	47563
9.8	34159	35361	36995	38238	41080	43994	46906	49835
10.0	35968	37240	38897	40135	43127	46081	49149	52160

Kd Values

Trapezoidal Section Design
Drainage Field Ditch

Side Slope – 4:1
n – 0.040

D	b=4'	b=5'	b=6'	b=7'	b=8'	b=10'
0.4	38	46	54	61	69	86
0.5	57	68	81	91	103	125
0.6	81	97	112	127	142	174
0.7	110	129	148	169	188	229
0.8	142	167	190	216	239	291
0.9	181	209	238	269	300	358
1.0	223	258	293	328	365	437
1.1	270	320	354	395	437	520
1.2	326	374	422	468	516	610
1.3	386	438	493	549	603	709
1.4	451	510	575	633	693	817
1.5	527	592	660	729	796	933
1.6	606	678	751	828	901	1058
1.7	691	775	856	939	1020	1198
1.8	807	900	989	1081	1170	1358
1.9	883	982	1078	1177	1277	1480
2.0	990	1097	1207	1314	1423	1641
2.1	1105	1220	1338	1452	1570	1804
2.2	1227	1350	1477	1600	1726	1987
2.3	1357	1489	1625	1765	1900	2179
2.4	1495	1636	1782	1931	2074	2371
2.5	1642	1793	1947	2106	2259	2573
2.6	1798	1958	2131	2289	2462	2796
2.7.	1963	2141	2315	2483	2662	3019
2.8	2136	2324	2508	2686	2878	3250
2.9	2318	2518	2711	2910	3102	3507
3.0	2511	2721	2846	3134	3335	3761

Kd Values

Trapezoidal Section Design
Drainage Field Ditch

Side Slope – 8:1
n – 0.040

D	b=4'	b=5'	b=6'	b=7'	b=8'	b=10'
0.4	46	53	61	68	76	92
0.5	71	81	94	105	115	139
0.6	105	119	133	148	163	194
0.7	144	164	182	201	220	259
0.8	192	216	238	264	287	335
0.9	248	277	307	334	365	423
1.0	317	351	382	418	451	522
1.1	392	431	472	509	551	634
1.2	478	523	569	616	659	753
1.3	574	625	677	730	785	891
1.4	681	738	796	856	917	1035
1.5	800	863	928	994	1062	1201
1.6	931	1001	1079	1153	1220	1373
1.7	1074	1159	1238	1318	1401	1559
1.8	1230	1323	1409	1497	1586	1770
1.9	1400	1501	1594	1689	1787	1987
2.0	1583	1693	1793	1897	2003	2218
2.1	1780	1900	2008	2120	2233	2465
2.2	1982	2120	2237	2358	2479	2741
2.3	2220	2357	2483	2624	2754	3021
2.4	2464	2609	2745	2894	3034	3319
2.5	2722	2877	3021	3182	3331	3636
2.6	2997	3162	3516	3488	3644	3969
2.7	3289	3466	3627	3810	3976	4317
2.8	3597	3785	3956	4150	4326	4705
2.9	3924	4123	4304	4506	4692	5093
3.0	4269	4476	4668	4882	5079	5502

Kd Values

Trapezoidal Section Design
Drainage Field Ditch

Side Slope – 10:1
n – 0.040

D	b=4'	b=5'	b=6'	b=7'	b=8'	b=10'
0.4	50	57	64	72	80	95
0.5	78	89	100	111	122	143
0.6	115	131	145	160	175	203
0.7	163	180	198	220	239	275
0.8	219	240	266	288	311	359
0.9	285	314	341	368	400	457
1.0	361	396	427	464	497	563
1.1	451	490	532	569	606	688
1.2	551	597	644	687	736	824
1.3	666	717	771	818	874	981
1.4	793	852	911	972	1026	1146
1.5	935	1000	1066	1134	1142	1314
1.6	1091	1163	1237	1312	1340	1535
1.7	1273	1306	1424	1505	1590	1751
1.8	1461	1549	1626	1717	1808	1983
1.9	1667	1762	1846	1943	2043	2233
2.0	1888	1991	2096	2189	2297	2517
2.1	2128	2239	2353	2466	2570	2806
2.2	2387	2507	2627	2749	2861	3115
2.3	2662	2792	2921	3053	3171	3443
2.4	2958	3095	3234	3375	3518	3792
2.5	3273	3419	3567	3718	3852	4164
2.6	3608	3764	3922	4083	4246	4555
2.7	3965	4131	4300	4468	4641	4970
2.8	4344	4517	4697	4875	5059	5431
2.9	4743	4927	5117	5306	5497	5891
3.0	5161	5360	5557	5757	5963	6375

Kd Values

Trapezoidal Section Design
Drainage Field Ditch

Side Slope – 12:1
n – 0.040

D	b=4’	b=5’	b=6’	b=7’	b=8’	b=10’
0.4	53	62	69	75	83	99
0.5	85	96	106	118	129	150
0.6	126	143	157	172	184	215
0.7	181	199	216	235	254	293
0.8	244	266	288	315	338	386
0.9	320	346	377	404	432	489
1.0	408	439	475	508	540	613
1.1	499	552	588	626	706	747
1.2	628	675	716	766	810	897
1.3	727	814	860	917	965	1074
1.4	909	969	1022	1084	1139	1260
1.5	1100	1141	1200	1269	1330	1465
1.6	1256	1331	1407	1473	1552	1689
1.7	1458	1540	1622	1672	1781	1933
1.8	1618	1766	1859	1937	2033	2210
1.9	1903	2015	2114	2214	2302	2496
2.0	2091	2282	2389	2483	2594	2804
2.1	2456	2570	2687	2788	2908	3136
2.2	2758	2882	3008	3134	3244	3490
2.3	3083	3214	3350	3486	3605	3865
2.4	3430	3571	3714	3859	3987	4265
2.5	3799	3950	4102	4258	4372	4692
2.6	4213	4353	4517	4682	4828	5194
2.7	4611	4783	4957	5134	5199	5531
2.8	4928	5240	5421	5608	5773	6154
2.9	5526	5720	5912	6111	6280	6685
3.0	6050	6224	6432	6637	6821	7244

Kd Values

Trapezoidal Section Design
Drainage Field Ditch

Side Slope – 14:1
n – 0.040

D	b=4’	b=5’	b=6’	b=7’	b=8’	b=10’
0.4	57	64	72	80	91	102
0.5	92	102	113	124	136	157
0.6	140	154	169	183	199	235
0.7	198	216	234	253	272	311
0.8	269	291	313	337	359	408
0.9	354	381	412	440	465	525
1.0	454	485	522	555	588	655
1.1	570	613	650	687	725	802
1.2	713	755	797	852	880	981
1.3	853	909	956	1004	1063	1164
1.4	1021	1084	1138	1192	1257	1370
1.5	1211	1279	1339	1410	1472	1598
1.6	1419	1495	1561	1641	1684	1849
1.7	1649	1733	1807	1893	1968	2135
1.8	1900	1993	2072	2168	2256	2431
1.9	2175	2275	2363	2467	2555	2698
2.0	2473	2582	2675	2770	2883	3097
2.1	2793	2912	3013	3135	3239	3470
2.2	3140	3268	3378	3510	3621	3868
2.3	3514	3649	3767	3909	4029	4294
2.4	3912	4058	4184	4324	4453	4746
2.5	4336	4491	4649	4786	4924	5228
2.6	4788	4955	5123	5269	5442	5741
2.7	5270	5448	5628	5783	5968	6281
2.8	5783	5972	6159	6340	6520	6853
2.9	6323	6524	6722	6897	7105	7458
3.0	6895	7108	7318	7503	7718	8090

Kd Values

Trapezoidal Section Design
Drainage Field Ditch

Side Slope – 4:1
n – 0.040

D	b=4'	b=5'	b=6'	b=7'	b=8'	b=10'
0.4	61	69	75	83	92	104
0.5	100	111	122	132	143	166
0.6	151	165	179	194	211	237
0.7	215	233	251	270	291	329
0.8	293	315	337	363	381	432
0.9	388	420	447	474	507	554
1.0	499	536	568	600	640	692
1.1	635	671	709	756	804	863
1.2	784	825	868	913	965	1045
1.3	953	1001	1050	1107	1158	1249
1.4	1142	1197	1251	1318	1376	1488
1.5	1356	1416	1476	1549	1627	1739
1.6	1590	1657	1724	1806	1879	2017
1.7	1850	1924	1998	2086	2183	2319
1.8	2134	2215	2297	2394	2300	2646
1.9	2445	2531	2621	2727	2845	3003
2.0	2782	2876	2973	3086	3216	3386
2.1	3146	3246	3352	3475	3686	3799
2.2	3537	3647	3761	3862	4011	4241
2.3	3960	4079	4198	4341	4465	4715
2.4	4412	4539	4667	4816	4952	5217
2.5	4892	5028	5165	5330	5522	5778
2.6	5404	5550	5697	5872	6022	6354
2.7	5951	6106	6292	6450	6610	6958
2.8	6533	6698	6896	7059	7228	7604
2.9	7146	7321	7531	7708	7887	8276
3.0	7795	7880	8197	8385	8656	8992

Kd Values

Trapezoidal Section Design
Drainage Field Ditch

Side Slope – 18:1
n – 0.040

D	b=4'	b=5'	b=6'	b=7'	b=8'	b=10'
0.4	66	72	79	85	94	109
0.5	106	117	128	139	151	172
0.6	161	175	189	201	220	248
0.7	234	249	271	291	305	320
0.8	321	344	361	390	408	457
0.9	425	452	480	516	536	595
1.0	548	580	613	645	679	748
1.1	692	729	766	805	844	923
1.2	856	899	941	986	1031	1121
1.3	1043	1092	1140	1191	1240	1342
1.4	1253	1307	1363	1418	1476	1591
1.5	1489	1550	1611	1686	1735	1878
1.6	1749	1816	1884	1968	2039	2182
1.7	2037	2111	2187	2280	2438	2513
1.8	2351	2433	2516	2616	2702	2872
1.9	2696	2786	2874	2987	3077	3263
2.0	3070	3168	3264	3383	3482	3684
2.1	3473	3579	3708	3813	3920	4139
2.2	3909	4024	4163	4277	4392	4629
2.3	4380	4503	4650	4772	4896	5151
2.4	4882	5015	5172	5303	5437	5706
2.5	5420	5559	5727	5868	6010	6298
2.6	5991	6139	6319	6470	6622	6929
2.7	6600	6758	6950	7111	7273	7600
2.8	7249	7417	7621	7792	7958	8306
2.9	7932	8110	8327	8508	8684	9053
3.0	8655	8844	9074	9259	9453	9836

CULVERT DESIGN

Culverts are designed with either inlet or outlet control.

In cases where it is not obvious which flow condition exists, determine the culvert size (or discharge) for each condition. The condition that gives the larger pipe size (or smaller discharge) governs.

Outlet Control

Outlet control exists under the following conditions:

1. Culvert is on mild or no slope.
2. Inlet is submerged.
3. Head (H) is the difference between the headwater level and the tailwater level when the outlet is completely submerged or the 0.6D level when the outlet is partially submerged.

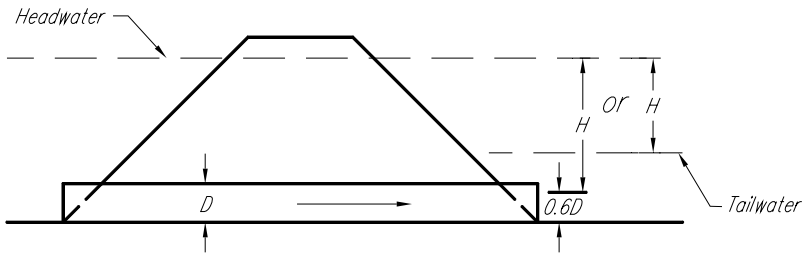

Outlet Control – Full Pipe Flow

Inlet Control

Inlet control exists under the following conditions:

1. Inlet may or may not be submerged.
2. Culvert is on a steep slope.
3. Culvert has free outlet.
4. There is a free water surface in the culvert barrel.

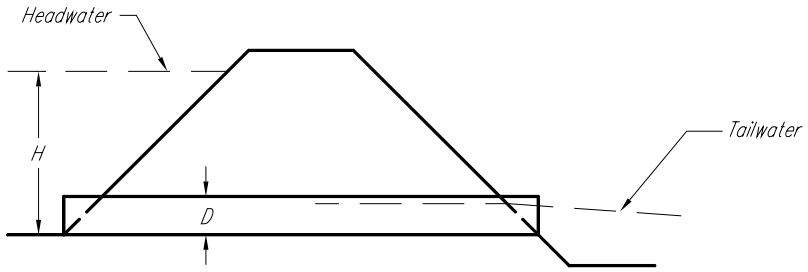

Inlet Control

The above is a very simplified discussion of culvert hydraulics. Conditions that cannot be classified as outlet or inlet control will generally be some type of channel flow. Capacity tables for culverts with outlet and inlet control are given in Appendix 14A and 14B, respectively.

Culvert Elevation

More complete information on the hydraulics of culvert and drain ditch design may be found in Chapter 3 of this handbook and in Chapter 6, Section 16, National Engineering Handbook.

NATURAL RESOURCES CONSERVATION SERVICE
CONSTRUCTION SPECIFICATION

CONCRETE

1. SCOPE

This specification covers concrete construction for CO-01 practices.

2. DESIGN OF THE CONCRETE MIX

The contractor shall be responsible for the design of the concrete mix and for providing a letter certifying that the concrete mix (with admixtures if used) will provide the required compressive strength verified with test results. This letter shall be provided to the landowner with copies to the NRCS engineer or representative at the pre-construction conference.

The proportions of the aggregate shall be such as to produce a concrete mixture that will work readily into the corners and angles of the forms and around reinforcement when consolidated but will not segregate or exude free water during consolidation.

The concrete mix shall have a 28-day compressive strength of 4,000 psi and a minimum of 6 bags of cement per cubic yard. Cement may be replaced with fly ash in quantities of up to 20 percent by weight of the total required cement. The water-cement ratio (w/c) shall not exceed 0.49.

Entrained air must be used in all concrete that will be exposed to freezing and thawing. The air content by volume shall be 5 to 8 percent.

The slump shall be a maximum of 5 inches.

Superplasticizers may be used, provided the NRCS engineer or his or her representative at the pre-construction conference approves their use. Superplasticizers shall be used according to manufacturer's recommendations. The maximum slump before adding superplasticizers shall be 2 ½ inches. The maximum slump after adding superplasticizer shall be 7 ½ inches.

The designer or landuser may add synthetic fibers to the concrete mix. The fibers shall be polypropylene and added per manufacturer's recommendation.

Synthetic fibers aid in the bleeding process, helps reduce segregation of the concrete mix, and helps reduce the formation of shrinkage cracks while the concrete is in the plastic state and during the first few hours of curing.

Synthetic fibers are not a substitute for steel reinforcement.

3. MATERIAL SPECIFICATIONS

All materials used in concrete construction shall meet the applicable ASTM standards and/or ACI specifications.

4. BATCH TICKET INFORMATION

The contractor shall obtain from the supplier a delivery ticket for each batch of concrete before unloading at the site. The following minimum information shall be included on the ticket:

a. Name of concrete supplier.

b. Name of purchase and job location.

c. Date of delivery.

d. Amount of concrete delivered.

e. Time loaded.

f. Design mix designation.

g. Admixture(s) – Type and Quantity.

h. Quantity of cement on truck.

i. Quantity of water added at plant.

The contractor shall be responsible for any changes to the design mix. The batch ticket shall also include the following information:

a. Time the concrete arrived at the site.

b. Water added by the receiver of the concrete.

c. Admixture(s) added on site – type, quantity, and time admixture added to the concrete.

d. Time the concrete was unloaded.

Upon completion of the placement, copies of all batch tickets shall be provided to the landowner.

5. CONCRETE SLABS

Design slabs considering the required performance and the critical applied loads. The subgrade material must be evaluated as to the suitability and denseness. A 4-inch thick layer of crushed gravel or limestone shall be provided as a uniform subbase. Where the subgrade is uniform and dense, a Type S-1 concrete slab is acceptable. Type S-2 concrete slabs shall be used where the subgrade material is non-uniform or has variable density, and it is not economical or feasible to improve the subgrade. The subgrade thickness in question is generally 12 inches, but could be more depending on the soil profile. Type S-3 concrete slabs shall be used when the contraction (control) joint spacing is to be more than 15 feet, when no contraction (control) joints are wanted, when reduced seepage is required, or when a watertight slab is required.

Type S-1 Concrete Slab:

Slab thickness shall be 5 inches.

Steel reinforcement is not required.

Contraction (control) joints shall be at a maximum spacing of 15 feet in both directions.

Contraction (control) joints shall be continuous, not staggered or offset.

Aspect ratio (length to width) of slab panels shall be a maximum of 1.5 to 1; however, a ration of 1 to 1 is preferred. L- and T- shaped panels shall be avoided.

Expansion joints are not required.

Isolation joints are required when complete freedom of vertical and horizontal movement is required.

Type S-2 Concrete Slab:

Slab thickness shall be 6 inches.

Steel reinforcement shall be #4 bars at 18 inches center to center.

Reinforcing bars shall be located in the top portion of the slab so the top steel rebar has 2 inches of concrete cover.

Reinforcing steel shall not extend across the contraction joint.

Contraction (control) joints shall be at a maximum spacing of 15 feet in both directions.

Contraction (control) joints shall be continuous, not staggered or offset.

Aspect ratio (length to width) of slab panels shall be a maximum of 1.5 to 1; however, a ratio of 1 to 1 is preferred. L- and T- shaped panels shall be avoided.

Expansion joints are not required.

Isolation joints are required when complete freedom of vertical and horizontal movement is required.

When required, vertical displacement at contraction (control) joints shall be controlled by smooth steel dowels, ¾ inch diameter, 16 inches in length, 12 inches center to center, place in the center of the slab thickness.

Type S-3 Concrete Slabs:

Slab thickness shall be 5 inches plus total steel thickness.

Steel reinforcement shall be based on contraction (control) joint spacing. See table below.

Reinforcing steel shall not extend across the contraction (control) joint.

Reinforcing bars shall be located in the top portion of the slab, so the top steel rebars have a minimum of 1.5 inches to maximum of 2.0 inches of concrete cover. No other tolerance permitted.

When required, vertical displacement of contraction (control) joints shall be controlled by smooth steel dowels (same as Type S-2 concrete slab).

Contraction (control) joint spacing, steel requirements, and slab thickness shall be from the following table. The contraction (control) joint spacing is based on Grade 60 steel.

Contraction Joint Spacing	Rebar Size and Spacing	Slab Thickness	Lap Splice
20 ft.	#4 bars 16” cc	6”	20”
30 ft.	#4 bars 12” cc	6”	20”
40 ft.	#5 bars 15” cc	6 ½”	25”
50 ft.	#5 bars 12” cc	6 ½”	25”
60 ft.	#6 bars 15” cc	6 ½”	30”
70 ft.	#6 bars 14” cc	6 ½”	30”
80 ft.	#6 bars 12” cc	6 ½”	30”

The rebar in the longest direction shall be placed nearest the top of the concrete slab.

Rebar lap splice length shall be a minimum of 40 bar diameters.

6. REINFORCEMENT

Welded wire reinforcement is not a substitute for steel reinforcement.

Synthetic fibers are not a substitute for steel reinforcement.

Reinforcing steel shall be deformed bars manufactured specifically for concrete reinforcement and shall be a minimum of Grade 40.

Reinforcing steel shall be free from loose rust, concrete, oil, grease, paint, or other deleterious coatings.

All reinforcing steel shall be cold-bent, if bends are required.

Welding of reinforcing steel is not permitted.

7. FORMS

Forms shall be of wood, plywood, steel, or other approved materials and shall be mortar tight. The forms and associated falsework shall be substantial and unyielding and shall be constructed so the finished concrete will conform to the specified dimensions and contours. Form surfaces shall be smooth and free from holes, dents, sags, or other irregularities.

8. PREPARATION OF SUBGRADE

Prior to placement of concrete, the forms and subgrade shall be free of chips, sawdust, debris, water, ice, snow, extraneous oil, mortar, or other harmful substances or coatings. Any oil on the reinforcing steel or other surfaces required to be bonded to the concrete shall be removed. Rock surfaces shall be cleaned by wire brush scrubbing, wet sandblasting, or air-water cutting, as necessary, and shall be firm and damp prior to placement of concrete. All other subgrade surfaces shall be firm and damp prior to placement of concrete. Placement of concrete on mud, dried earth, uncompacted fill, or frozen subgrade will not be permitted.

9. FORM AND STEEL PLACEMENT

Forms shall be coated with a non-staining form release agent before being set into place.

Form ties shall have a minimum 2-inch clearance from reinforcing steel.

Items to be embedded in the concrete shall be positioned accurately and anchored firmly.

Weepholes in walls or slabs shall be formed with non-ferrous materials.

Reinforcement shall be accurately place and secured in position in a manner that will prevent its displacement during the placement of concrete. Reinforcing steel shall be supported by precast concrete bricks or manufactured chairs. Except for dowel rods, placing steel reinforcement into concrete already in place will not be permitted.

Splices of reinforcing bars shall be made only at the locations shown on the drawings, unless otherwise approved by the engineer.

Unless otherwise indicated on the drawings, splices of reinforcing bars shall be a minimum 30-bar diameters of the largest bar involved in splice.

The minimum concrete cover on reinforcing bars is 2 inches on formed or exposed surfaces and 3 inches from earth or granular base surfaces.

Maximum variation from indicated bar spacing is 1/12 of the indicated bar spacing, but the required number of bars shall not be reduced.

Steel tying and form construction adjacent to concrete in place shall not be started until the concrete has cured at least 12 hours. Before new concrete is deposited on or against concrete that has hardened, the forms shall be retightened.

10. CONVEYING

Concrete shall be delivered to the site and discharged into the forms within 1½ hours after the introduction of the cement to the aggregates. In hot weather or under conditions contributing to quick stiffening of the concrete, or when the temperature of the concrete is 85° F or above, the time between the introduction of the cement to the aggregates and discharge shall not exceed 45 minutes.

Concrete shall be conveyed from the mixer to the forms as rapidly as practicable by methods that will prevent segregation of the aggregates or loss of mortar.

Superplasticizer may be used with the approval of the NRCS Engineer.

11. PLACING

Concrete shall not be place until the subgrade, forms, and steel reinforcement have been inspected and approved by the NRCS representative. Reasonable notice shall be given to this person prior to the time of concrete placement. Such notice shall be far enough in advance to give adequate time to inspect the subgrade, forms, steel reinforcement, and other preparations for compliance with the specifications before the concrete is delivered for placing.

The concrete shall be deposited as closely as possible to its final position in the forms, and shall be worked into the corners and angles of the forms, and around all reinforcement and embedded items in a manner to prevent segregation of aggregates or excessive laitance. There shall be no excessive lateral movement of concrete by the use of a vibrator in either forms or slabs.

Slab concrete shall be placed to design thickness in one continuous layer. Formed concrete shall be placed in horizontal layers not more than 20 inches thick. Hoppers and chutes, concrete pumps, pipes, or “elephant trunks” shall be used when vertical drop is in excess of 5 feet to prevent splashing of mortar on the forms and reinforcing steel and to prevent segregation.

Immediately after the concrete is placed, it shall be consolidated by vibrating as necessary to ensure smooth surfaces and dense concrete. Each layer shall be consolidated to ensure monolithic bond with the preceding layer. If the surface of a layer of concrete in place sets to the degree that it will not flow and merge with the succeeding layer when vibrated, the placement of concrete will be discontinued and a construction joint will be made.

If placing is discontinued when an incomplete horizontal layer is in place, a vertical bulkhead shall form the unfinished end of the layer.

In reinforced concrete construction, new concrete shall not be placed until the hardened concrete has cured at least 12 hours.

In non-reinforced concrete construction, the 12-hour limit does not apply.

12. CONSTRUCTION JOINTS

Construction joints are stopping places in the process of construction. A true construction joint should bond new concrete to existing concrete and permit no movement. Because extra care is needed to make a true construction joint, they are usually designed and built to function as, and align with, contraction or isolation joints.

Construction joints are placed in a slab where concreting operations are concluded for the day, generally in conformity with a predetermined joint layout. If at any time, concreting is interrupted long enough for the placed concrete to harden, a construction joint must be used.

Construction joints shall be made at the locations shown on the drawings. If construction joints are needed that are not shown on the drawings, they shall be placed in locations and in a manner approved by the NRCS representative.

Construction joints on unformed surfaces shall have a rough surface.

Construction joints shall moist cured for seven (7) days or until the adjoining concrete is placed.

Surfaces of all construction joints shall be cleaned of all unsatisfactory concrete, laitance, coatings, or debris by washing and scrubbing with a wire brush or wire broom, or by other means approved by the NRCS representative. The surfaces shall be kept moist for at least one hour prior to placement of the new concrete if past initial curing period.

13. ISOLATION (EXPANSION) JOINTS

Isolation joints are often called expansion joints, because they are intended to isolate structural units that behave in different ways. They permit both horizontal and vertical differential movements at adjoining parts of a structure. They are used to isolate walls from floors, columns from floors, slabs from existing structures or slabs, and in other locations where restraint or transmission of secondary forces is not desired.

Isolation joints require the use of an expansion joint material, which can be as thin as ¼ inch, but ½-inch thick material is commonly used. Preformed expansion joint filler shall be bituminous, cork, or rubber.

Isolation joints shall be made only at locations shown or noted on the drawings.

Exposed concrete edges at isolation joints shall be carefully tooled or chamfered, and the joints shall be free of mortar and concrete. Joint filler shall be left exposed for its full length with clean true edges.

Preformed expansion joint filler shall be held firmly in the correct position as the concrete is placed.

Expansion joints are not required at 30-foot intervals. Only contraction (control) joints are to be used, unless the designer determines isolation joints are necessary.

14. CONTRACTION (CONTROL) JOINTS

Contraction joints are often called control joints, because they are intended to control crack location. Contraction (control) joints are purposely made planes of weakness and are designed to regulate cracking caused by drying and thermal shrinkage of the concrete.

The maximum spacing of contraction (control) joints in concrete slabs on ground shall be as specified in Section 5.

The panels shall be as square as possible, but with a maximum aspect ratio (length to width) of 1.5 to 1. Avoid “L” or “T” shaped panels. Add joint at re-entrant corners. Contraction (control) joints shall be made only at locations shown or noted on the drawings.

Contraction (control) joints are to be made to a depth of ¼ the thickness of the slab.

Sawing is the most commonly used method to make contraction (control) joints.

Contraction (control) joints also can be formed in the fresh concrete with hand groovers or by placing strips of metal, or other suitable material at the joint location. The edges of these open joints shall be finished with an edging tool prior to removal of the joint strips.

15. WATERSTOPS

Waterstops shall be held firmly in the correct position as the concrete is placed. Joints in metal waterstops shall be soldered, brazed, or welded. Joints in rubber or plastic waterstops shall be cemented, welded, or vulcanized as recommended by the manufacturer. Wall pours shall not be continuous past waterstops. Vertical waterstops shall be held firmly in place by a bulkhead attached to the wall forms.

16. FINISHING UNFORMED SURFACES

All exposed surfaces of the concrete shall be accurately screeded to grade and then float finished.

Excessive floating or troweling of surface while the concrete is soft will not be permitted.

The addition of dry cement or water to the surface of the screeded concrete to expedite finishing will not be allowed.

Joints and edges on surfaces that will be exposed to view shall be chamfered or finished with molding tools.

17. REMOVAL OF FORMS

Forms for walls and columns shall remain tight and in place for a minimum of 24 hours and a maximum of 48 hours after placing the concrete. Forms for slabs shall not be loosened or removed for at least 12 hours after placing concrete.

Forms, which support beams or covers, shall not be removed for at least 7 days, or as otherwise stated on the drawings. Forms for beams or covers, which are to support additional forms or shoring, shall not be removed for at least 14 days.

Removal of forms shall be done in a manner that will not damage the concrete surface nor induce sudden or excessive stresses.

18. FINISHING FORMED SURFACES

Immediately after the removal of the forms, the surfaces shall be kept wet until all defects, holes, and other irregularities have been repaired.

All fins and irregular projections shall be removed from exposed surfaces.

Holes produced on all surfaces by the removal of form ties, cone-bolts, she-bolts, and other items shall be cleaned, wetted, and filled with a dry-pack mortar, consisting of one part Portland cement, three parts sand that will past a No. 16 sieve, and sufficient water to produce a consistency such that the filling is at the point of becoming rubbery when the material is solidly packed. An NRCS representative prior to their use must approve other patching material and procedures.

19. CONCRETE REPAIR

Concrete that is honey combed, damaged, or otherwise defective shall be repaired or removed and replaced.

The NRCS engineer or his or her representative will determine the required extent of removal, replacement, or repair. The plan for effecting the repair must be approved by the NRCS representative prior to the beginning of the repair work.

20. CURING

Concrete shall be prevented from drying for a curing prior of at least 7 days after it is placed. Exposed surfaces shall be kept continuously moist for the entire prior or until curing compound is applied as specified below. Sprinkling, flooding, fog spraying shall maintain moisture, or by covering with continuously moistened canvas, cloth mats, straw, sand, or other approved materials. Formed surfaces shall be thoroughly wetted immediately after forms are removed and shall be kept wet until patching and repairs are completed. Water or covering shall be applied in such a way that the concrete surface is not eroded or otherwise damaged.

Concrete, except at construction joints, may be coated with an approved curing compound in lieu of continued application of moisture. The compound shall be sprayed on the moist concrete surfaces, as soon as free water has disappeared but shall not be applied to any surface until patching, repairs, and finishing of that surface are completed. The compound shall be applied at a uniform rate of not less than one gallon per 150° square feet of surface, or at the manufacturer's recommendation, and shall form a continuous adherent membrane over the entire surface. Curing compound shall not be applied to surfaces requiring bond to subsequently placed concrete, such as construction joints, shear plates, reinforcing steel and other embedded items. If the membrane is damaged during the concrete curing period, the damaged are shall be resprayed at the rate of application specified above.

The use of white curing compound is strongly recommended.

21. BACKFILLING NEW CONCRETE WALLS

Placement and compaction of fill adjacent to new concrete walls shall not begin less than 14 days after placement of concrete. Walls that can be backfilled on both sides simultaneously, may be backfilled after 7 days.

Heavy equipment shall not be allowed within 3 feet of a new concrete wall. Provide compaction near the wall by means of hand tamping or small, manually directed equipment. Vibrating equipment shall not be permitted.

22. CONCRETING IN COLD WEATHER

Cold weather concreting procedures shall be used for all concrete mixed and placed between November 1 and April 1, regardless of weather forecasts.

Cold weather concreting procedures may be required before November 1 and after April 1, when the atmospheric temperature is less than 40° at the time of placement or predicted to fall below 32° in the following 24 hours.

The contractor shall submit a written plan, detailing how the concrete is going to be protected from freezing and how the required temperatures of the concrete and adjacent air will be maintained. The written plan shall be approved by the NRCS engineer or his or her representative, prior to any work on the project, except earthwork.

Cold weather concreting requirements are:

a. Required concrete temperature:

Minimum mixing temperature	60° F
Minimum placing temperature	55° F
Maximum placing temperature	75° F
Minimum temperature of concrete in-place (For the required curing period.)	55° F

b. When the cement is added to the mix, the temperature of the mixing water shall not exceed 140° F nor shall the temperature of the aggregate exceed 150° F.

c. The temperature of the adjacent air shall be maintained between 50° F and 90° F for a period of 7 days. The 7-day period starts at the time of concrete placement and continues for 7 consecutive days.

d. The concrete shall be immediately protected after placement by methods of covering, insulating, housing, or heating that will be sufficient to maintain the minimum temperature adjacent to the concrete surface.

e. At the end of the protection period, the concrete shall be allowed to cool gradually. The maximum decrease in temperature at the concrete surface in the first 24 hours shall not exceed 40° F.

The use of antifreeze compounds will not be allowed.

In the event that there is no plan or no cold weather provisions available, concrete placement will not be permitted.

23. CONCRETING IN HOT WEATHER

Concreting in hot weather shall be in accordance with the requirements set forth below.

For the purpose of this specification, hot weather is defined as any combination of the following conditions that may potentially impair the quality of freshly mixed or hardened concrete by

accelerating the rate of moisture loss and rate of cement hydration, or otherwise, resulting in detrimental results:

*** High ambient temperature.
*** High concrete temperature.
*** Low relative humidity.
*** Wind velocity.
*** Solar radiation.

Whenever the above conditions exist or when climatic conditions are such that the temperature of the concrete may reasonably be expected to exceed 90° F at the time of delivery to the work site or during the placement operations, the following provisions shall apply:

a. The contractor shall maintain the temperature of the concrete below 90° F during mixing, conveying, and placing.

b. Exposed concrete surfaces which tend to dry or set too rapidly shall be continuously moistened by means of fog sprays or other means to maintain adequate moisture during the time between placement and finishing. Water shall not be sprinkled or added directly to the surface of the concrete prior to finishing.

c. Finishing of slabs and other exposed surfaces shall be started as soon as the condition of the concrete allows and shall be completed without delay. Water shall not be sprinkled or added to the surface of the concrete during the darbying, bull floating, or other finishing operations to facilitate finishing.

d. When any single or combination of conditions may result in very rapid setting or drying of the concrete, extreme conditions exist. For flatwork and slab construction, extreme conditions exist when the evaporation rate exceeds 0.2 lb/ft2/hr.

e. The engineer or his or her representative may (1) restrict placement to the most favorable time of the day, (2) restrict the depth of layers to ensure coverage of the previous layer, while it will still respond readily to vibration, (3) suspend placement until conditions improve, and (4) restrict the removal of forms, repair, and patching to small areas, which can be protected with curing compound immediately.

f. The evaporation rate for flatwork and slab construction may be determined by calculating the evaporation rate from a shallow cake pan, having a surface area of at least 1 square foot or by other methods approved by the engineer.

g. The contractor shall submit a written plan, detailing procedures of mixing, placing, protection, curing, and temperature monitoring during hot weather. The NRCS engineer or his or her representative prior to the ordering of the concrete shall approve the written plan.

24. LOADING

This section deals with loads being applied to each structure after the construction has been approved.

Slabs – Do not drive on or load slabs before 14 days have elapsed after concrete placement, unless specified differently on the drawings.

Walls – Load shall not be applied to new concrete walls before 14 days have elapsed after concrete placement, unless specified differently on the drawings. Backfill is considered a load.

Columns and Beams – Load shall not be applied to new concrete columns before 28 days or when the concrete obtains a compressive strength of 4,000 psi; whichever comes first, unless specified differently on the drawings.

25. SAFETY CONCERNS

All work shall be conducted within applicable Federal, State, and local regulations. Utility locations, overhead obstacles, excavation safety, steel placement, impalement protection, and working with fresh concrete are of particular concern. Contractors shall have necessary safety equipment and procedures in place prior to commencement of construction.

26. ITEMS OF WORK AND CONSTRUCTION DETAILS

This section is to be used to add site specific details that are not covered under sections 1 through 25. This section would be on a separate page and attached to the specifications for the project.

Natural Resources Conservation Service
Agrichemical Storage Facility - 702
Design and Installations by Others

NRCS has approved the following fabricated facilities as meeting Conservation Practice Standard 702. The following procedure will be followed for the applicable supplier:

1. **J.C. Ramsdell Enviro Services, Inc**. furnishing and installing the galvanized steel C-Ring™ containment system manufactured by Westeel, Inc.

- When the facility is planned to be fastened on top of a new concrete pad, galvanized steel braces will support the walls, and the pad must be appropriately designed for the tank loads. For these installations, the NRCS engineer is to be contacted during facility planning. NRCS will not assist in projects where the braces are planned to be installed onto an existing concrete slab unless a J.C. Ramsdell engineer, licensed in the State of Ohio, certifies that the slab meets NRCS Conservation Practice Standard 702 design requirements in writing.

- The installation will include provisions to protect the liner from damage from placement of steel tanks and foot traffic. This may consist of an 8 oz. (minimum) non-woven geotextile and 4" to 6" of No. 8 or No. 67 rounded gravel placed on top of the liner or a manufacturer supplied liner surfacing material.

- J.C. Ramsdell will provide details for each installation by providing the applicable drawing as numbered below:

JCR1.2- 21" oval	JCR4.2- 21" circular	JCR7.2- 21" rectangular
JCR2.2- 33" oval	JCR5.2- 33" circular	JCR8.2- 33" rectangular
JCR3.2- 44" oval	JCR6.2- 44" circular	JCR9.2- 44" rectangular

These drawings are reproductions of the original stamped drawings with the following items noted:

➢ "COPY" is printed on the engineer's seal.

➢ The landowner's name is written on the drawing, and each drawing is assigned a unique number by J.C. Ramsdell.

- Each drawing provided by J.C. Ramsdell will be supplemented by the following:

➢ Westeel C-Ring™ Secondary Containment System Installation & Assembly Manual to be provided to the landowner and followed during installation as referenced in the construction drawings.

➢ Design dimensions of the secondary containment system and location of fertilizer tanks within the system.

➢ Details and location of the sump installation as appropriate. In some installations the floor may be sloped to a low corner in lieu of a sump.

- Design worksheets for sizing the facility showing both the minimum regulatory and designed containment volumes.

- The Ramsdell supplied drawings shall be attached to an NRCS cover page for approval. The following items shall be added to the NRCS approved drawings as Construction Notes:

  - The secondary containment facility shall be installed as detailed on the attached engineering Drawing Number JCR-XXX provided by J.C. Ramsdell Enviro Services, Inc. (drawings), and the Westeel C-Ring™ Secondary Containment System Installation & Assembly Manual (installation manual).

  - J.C. Ramsdell Enviro Services, Inc. and/or their representative are responsible for needed investigations and testing to determine that the soil at the site is suitable to meet the minimum specifications for pier support as stated in the installation manual and the minimum bearing capacity stated on the drawings. J.C. Ramsdell Enviro Services, Inc. and/or their representative are responsible for an alternate foundation design when the soils at the site are not suitable.

  - Design dimensions for the facility have been provided by J.C. Ramsdell Enviro Services, Inc. and/or their representative.

  - The landowner is responsible for submitting all necessary plans and applications for permits to the Ohio Department of Agriculture (ODA) for their review and approval. The landowner shall provide the NRCS field office with a copy of the ODA approval letter prior to construction.

- Upon completion of the project, J.C. Ramsdell Enviro Services, Inc. and/or their representative shall provide a written completion certification to the landowner, stating that the structure was constructed in conformance to the drawings and installation manual, and where applicable, a J.C. Ramsdell engineer approved all noted changes.

- Written certification will be provided to the landowner, stating that all warranties for the Westeel C-Ring™ containment system and the J.C. Ramsdell Enviro Services, Inc. Ferto-Guard™ reinforced polypropylene liner are in effect.

- The landowner shall be responsible for contacting ODA upon completion of the project for installation inspection and approval.

- NRCS will "construction approve" the drawings after the landowner provides the field office with a copy of the above noted:

  - Completion certificate from the supplier.

  - Warranty certification from the supplier.

  - Construction approval letter from ODA. Note: When ODA cannot schedule an installation inspection within two weeks of notification of completion or when ODA approval is delayed for reasons other than satisfactory completion of the secondary containment system, then NRCS can construction approve the installation upon receipt of installer certifications.

2. **Hunter Agri-Sales, Inc**. furnishing and installing the Type II Plia-Dike secondary containment system.

- The installation will include provisions to protect the liner from damage from placement of steel tanks and foot traffic. This may consist of 4" to 6" of No. 8 or No. 67 bank run gravel placed on top of the liner or a manufacturer supplied liner surfacing material.
- "The installation details for the 3'-6" wall shall follow stamped drawings dated April 6, 1994, provided by Gaston Engineering. Installation details for the 2'-0" wall shall follow a stamped sketch dated November 3, 2003, provided by Lawrence Wickstrom, P.E. Both applications shall follow the Plia-Dike installation procedure provided by Hunter Agri-Sales, Inc. amended or supplemented with the following:"
  - The 36 mil. hypalon liner shown on the drawings is replaced by a 45 mil. reinforced polypropylene liner.
  - Design dimensions of the secondary containment system and location of fertilizer tanks within the system.
  - Details of the sump installation.
  - Design worksheets for sizing the facility.
- The following construction notes are to be added to the NRCS approved drawings:
  - The secondary containment facility shall be installed as detailed on the attached engineering drawing provided by Gaston Engineering and the Hunter Agri-Sales, Inc. installation manual.
  - Design dimensions for the facility have been provided by Hunter Agri-Sales, Inc.
  - The landowner is responsible for submitting all necessary plans and applications for permits to ODA for their review and approval. The landowner shall provide the NRCS field office with a copy of the ODA approval letter prior to construction.
- Upon completion of the project, Hunter Agri-Sales, Inc. shall provide a written completion certification to the landowner, stating that the structure was constructed in conformance to the drawings and installation manual, and where applicable, a Hunter Agri-Sales, Inc. engineer approved all noted changes.
- Written certification will be provided to the landowner, stating that all warranties for the Plia-Dike containment system and the reinforced polypropylene liner are in effect.
- The landowner shall be responsible for contacting the ODA upon completion of the project for installation approval.
- NRCS will "construction approve" the drawings after the landowner provides the field office with a copy of the above noted:
  - Completion certificate.
  - Warranty certification.
  - Construction approval letter from ODA. Note: When ODA cannot schedule an installation inspection within two weeks of notification of completion or when ODA approval is delayed for reasons other than satisfactory completion of the secondary containment system, then NRCS can construction approve the installation upon receipt of installer certifications.