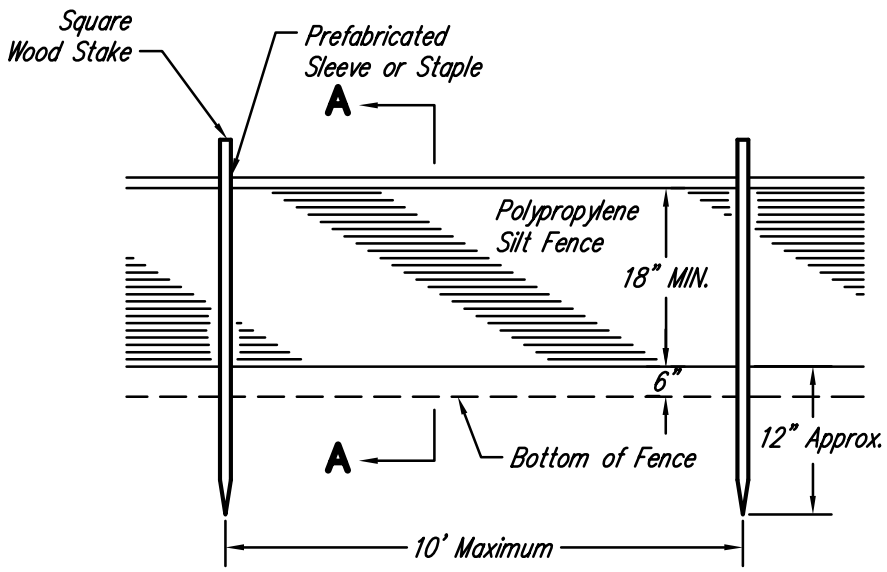

SILT FENCE

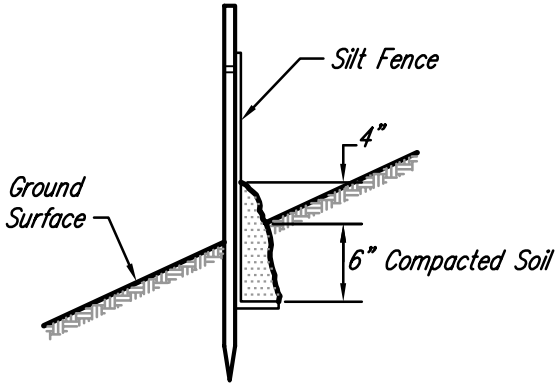

SECTION A–A

Description: SILT FENCE

Filename: OH400402.DWG